TUBE-LINE MANUFACTURING INC

Techno-Bale

---------- Operators Manual ----------

Wagon for handling and transportation of round bales

Model 900

One-Year Manufacturer's

Warranty

For Normal Use With The Exception Of Tires

If the equipment does not function properly, or if a piece is defective due to a manufacturer's defect during the first year following purchase, the defect will be repaired free of charge.

If this machine is used for commercial application or for lease/rent, this guarantee will be valid for 90 days, following date of purchase.

Your satisfaction is essential to us. The department of customer service at point of purchase should resolve any problem concerning this equipment. If you have a warranty related problem that has not been rectified to your satisfaction, we suggest that you take the following action.

- Speak to the manager at the point of purchase. Most problems can be rectified at this level.
- If you have already consulted the manager and there has not been an acceptable resolution, you may contact the manufacturer directly.

Tubeline Manufacturing Inc.
RR #3 Listowel, ON. N4W 3G8
Telephone (519)-291-4162 ■ 1-866-567-4162
Fax 519-291-5388
e-mail: sales@tubeline.ca
Web Site: www.tubeline.ca

To be better able to serve you, please include the following information:

- Your name, address and telephone number
- Model number, and serial number
- The date of purchase and the name of your supplier
- Nature of the problem

After studying your request, you will be advised of the steps to be taken. Note that your situation will be rectified through your supplier, with their equipment and personnel.
It is therefore very important that the first attempt to rectify the problem/question be with the supplier.
For future reference, take note immediately of the model number, serial number and date of purchase.
The serial number is located at the rear of the left tongue, close to the deck.

_____	_____	_____
Model Number	Serial Number	Date of Purchase

Safety

Take note! This safety alert symbol is found throughout this manual to call your attention to instructions involving yourself and others working around the machine.

- **Failure to follow these instructions can result in <u>injury or death!</u>**

This symbol means

-Attention!
-Become Alert!
-Your Safety is involved!

Signal Words are used in this book.

Caution: Indicates a potentially hazardous situation that may result in injury.

Warning: Indicates a potentially hazardous situation that could result is serious injury or death.

Danger: Indicates a hazardous situation that needs to be avoided. It is you the operator that needs to be aware of these dangers.

If you have any questions not answered in this manual, please contact your dealer or Tubeline Manufacturing Inc

RR # 3 Listowel Tel: (519-291-4162 1-866-567-4162
Ontario Canada Fax (519-291-5388
N4W 3G8 e-mail sales@horstwelding.com

Safety -- It's in your interest.

Safety Guidelines

Safety of the operator is one of our main concerns, however we do hear of some accidents that could have been avoided if some precautions had been taken.
To avoid personal injury study the following precautions and insist those working with you or for you, follow them.

Replace any decals that may be missing or that is not readable. Location of the decals are indicated in this manual.

Do not operate this machine while under the influence of drugs or alcohol.

Review the safety instructions with all users annually.

This equipment should not be operated by children, or with those unfamiliar with the operation of the machine. **Do not allow persons to operate this machine until they have read this manual and/or were instructed by a qualified person.**

Do not paint over, remove or deface any safety signs or warning decals on your equipment. Observe all safety signs and practice the instructions on them.

Safety Decal Location

Both Sides

A

B

Both Sides

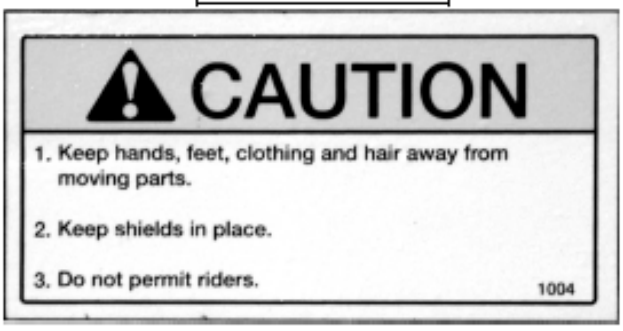

C

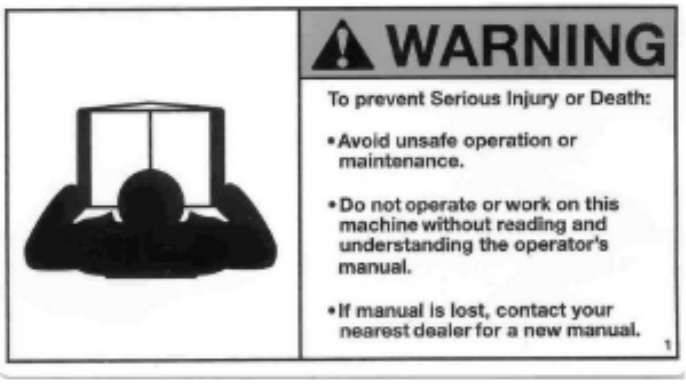

D

- Keep safety signs clean and legible at all times
- Replace safety signs that are missing or illegible
- Decals are available through your Dealer, Distributor or Factory.

Maintain proper tire pressure at all times

- On the rear axle replace tire with the same type and brand if possible. If this is not practical then replace with a tire that has the same outside diameter as the original as the brakes may or may not release. (We have found ¾" diameter difference between brands)

Remember

Your best assurance against accidents or damage to the machine is to know how it operates. If you do not understand a portion of the manual or a function of the wrapper please contact your dealer or an experienced operator.

Before Operation

- Carefully study and understand the manual or be trained by an experienced operator.
- Do not wear loose clothing which may get caught in moving parts.
- Visually inspect the machine to make sure no parts are loose or missing
- Be sure that no tools are left on the machine
- Do not hurry the learning process. Be familiar with one part before trying the next part.
- Practice by running the machine through its paces.

Safety
And Security

The following precautions are suggested for the purpose of accident prevention. The best operator is a prudent operator. Most accidents can be avoided with certain care. Please read all information carefully before using your Techno-Bale. Only a trained and responsible operator should operate this equipment.

❖ Training

1. Read the manual
2. Learn the controls of the Techno-Bale
3. Identify the moving parts
4. Know how to stop the machine during any function

❖ Precautions

1. Know the range of all the moving parts
2. Never let anyone stand near or touch any moving part
3. Never work on or under the machine while the bed is raised. (unloading position)
4. The Techno-Bale must be used by experienced operators only
5. The loading arm is held in vertical position with a security valve when the Techno-Bale is not connected to the tractor. In addition to the security valve, you must, for empty "on-road" transportation attach the loading arm with a cable or chain to the opposite rail
6. the operator must wear properly fitting clothing and prohibit anyone wearing loose fitting clothing to be near any moving parts

❖ Maintenance

1. Follow the recommendation on page ?????
2. During inspections, assure that the moving parts are stopped
3. Secure moving parts to ensure that the service person will not be trapped if a hydraulic line breaks or looses pressure

1 Connection

Minimum required HP **Techno-Bale 900** – 35 HP tractor

1. Connect the Techno-Bale to the tractor

2. Remove the jack from the vertical position and store it in the horizontal position at the front of the bed (in the space provided)

3. Install the extensions or the vertical stacking forks, according to the desired method of unloading

4. Connect the 4 Quick Couplers to the tractor hydraulic remotes, Connect the selector valve to a 12 volt source

5. Open the security valve of the loading arm. (ball valve)

6. Try the loading arm – lower and raise
   Leave in the raised position for transportation

2 Setup

Numerous adjustments can be made to meet your specific needs.

Deck Extensions = or Forks ||

The **Extensions** are attached to the rear of the Techno-Bale. They permit the transportation of one ore two extra round bales and are used for unloading in-line.

The **Forks** are attached to the vertical pockets (also at the rear) of the Techno-Bale. They permit vertical unloading (chimney style).
Extensions and Forks have to be used separately (they are separate items)

The Guide Rail

The guide rails are adjustable according to the bale diameter

Loading Arm

The distance between the forks of the loading arm is adjustable according to the diameter of the bales.

Suggested width between the forks

4 x 4 = 42" <> 4 x 5 = 45" <> 4 x 6 = 48" to 50" approx

3: Controls

Loading

Open the security valve (ball valve) allowing the loading arm to be raised and lowered with the tractor hydraulics

Push Bar

The other set of hydraulics are used to extend and retract the Bale Pusher

Unloading

Activate the electric selector valve to change the function of the Bale Pusher to raise the Deck. The Deck cylinder has a latch to lock the Deck onto the frame, make sure that the cylinder is fully retracted after the Deck has been lowered.

4: Loading

*The Techno-Bale 900 picks up and moves **5 Bales** depending on unloading and storage*

Loading may be done on the go.

One bale may be transported on the loading arm, leaning against the last bale loaded.

It is possible to pick up a bale even if it is not parallel to the fork. You can rotate it inot position by using the interior of the outside fork. *(see illustration)*

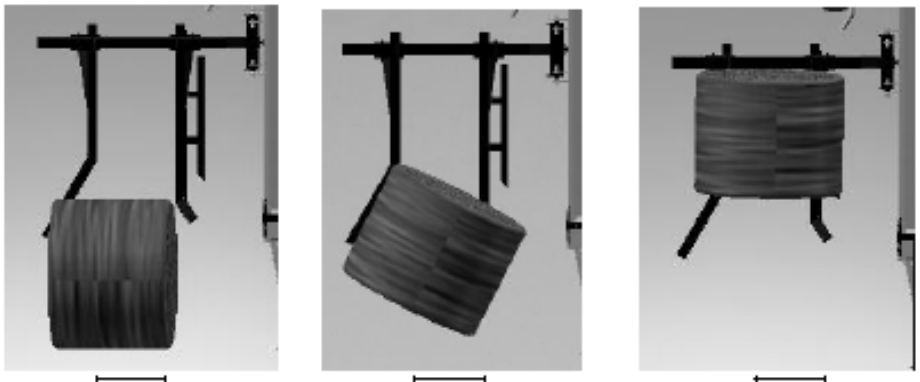

1 2 3

This operation must be executed while moving. After a few tries, you will be able to pick them up from almost every direction.

5 Unloading and Storing

The Techno-Bale offers the possibility of vertical or horizontal unloading.

Horizontal Unloading

Ideal for horizontal storage or bales to be wrapped

If you are transporting a bale on the fork, put down the bale and backup to disengage the bale from the loading arm before unloading the main Deck

To unload, activate the Deck cylinder and raise the bed until the bales slide freely. If the incline is too steep, the bales may tumble out. Then move forward until all the bales are disengaged from the Deck, before lowering the bed.

Vertical Stacking

Ideal for sheltered bales

The degree of inclination is 95° to disengage the bales from the bed.

The hitch height must be at least 16" from the ground

6: Overall Process

- Steer towards the bale
- Lower the loading arm completely to the GROUND
- Line up the point of the exterior fork with the far side of the bale
- Drive into the bale without stopping, and pivot parallel to the loading arm.
- Raise the loading arm
- Activate the Bale Pusher (while driving)
- Continue to the next bale (while lowering the loading arm)
- Load 4 bales on the Techno-Bale 900 and raise the 5th for transport on the loading arm.
- To unload remove the bale from the loading arm (by lowering the bale to the ground and backing up), switch the electric diverter valve and activate the same valve as the Bale Pusher control, this will now activate the Deck cylinder. The deck cylinder is integrated with a latch to keep the front of the deck lock in the down position.
- Horizontal storage – raise the bed to 45° (halfway) and drive forward to unload
- Vertical storage – Raise the bed to 95° (completely) and drive forward

Loading 1-2-3

7: On-Road Transportation

If you must travel a certain distance with an empty Techno-Bale it is recommended to:

- Secure the loading arm in the raise position
- Remove the Extensions

8: Storing your Techno-Bale

1. Remove the hydraulic hoses from the tractor and hang them over the hook on the Bale Pusher Arm
2. Remove the Selector Valve control wire off the tractor and store it on the Techno-Bale
3. Close the security Vale (ball valve) to hold the Loading Arm in the vertical position
4. Reposition the jack, in front of the Techno-Bale to keep it level, and to facilitate the next hook-up.

9: Lubrication

Lubrication intervals will vary depending on grease points, as some joints will be doing more work.

You will find this symbol on the Techno-Bale, Close to the grease points

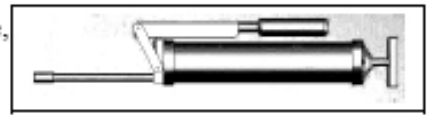

A – Loading arm cylinder support

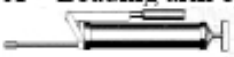

Daily

B – Loading arm Support "Pins" (2 sides)

Bi-annually

C – Deck support "Pins"

Situated on each side at the rear of the Techno-Bale (2)

Bi-annually

D – Bale Pusher Arm Cylinder Bracket

Monthly

E – Axle "walking beams" (2 sides)

Bi-annually (generously)

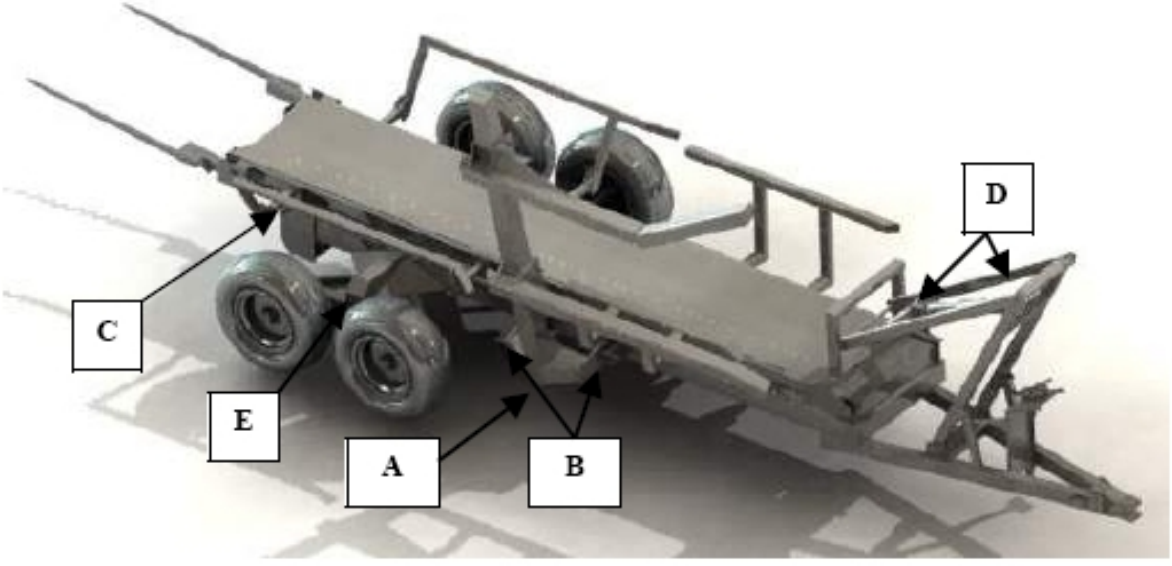

10: Troubleshooting

If the machine is not functioning properly

Verify That

- The tractor hydraulic system is working
- The Hydraulic hoses are properly connected
- The loading security valve is not closed. (must be open)
- Hydraulic Connections are not reversed

"The bale cords are hooking on the rear railing"

The side arm railing may be adjusted to take bales from 48" to 60"
Verify that you have the proper setting

No Power on the Selector Valve

Check the fuse and/or the ground, also check for broken wire.

Specifications
900

Length	21'
Width	7'10"
Weight	3000 pounds
Cylinders	3"x 16"
Cylinders	3"x 18"
Cylinders	4" x 18"
Loading Arm	5" x 5" tube
Loading Fork	4" x 4"
Selector Valve (double)	12Volt
Tire	(4) Tires 11-L – 15 farm implement 8 Ply

Tubeline Techno-Bale 900
Main Assy

Item	Qty	Part Number	Description
1	1	900-100-100	Main Frame
2	1	900-100-101	Deck
3	1	900-100-102	Front Scissor Arm
4	1	900-100-103	Rear Scissor Arm
6	1	900-100-104	Bale Pusher Cylinder
7	1	900-100-105	Deck Cylinder
8	1	900-100-106	Bale Pusher
9	1	900-100-107	Bale Loader Arm
10	2	900-100-108	Walking Beam
11	1	900-100-109	Jack
12	1	900-100-110	Left Table Extension c/w spear (see p.19)
13	1	900-100-111	Right Table Extension c/w Spear (see p.19)
14	1	900-100-112	Carriage Pin
15	2	900-100-113	Extension Arm Pivot Pin
16	1	900-100-114	Scissor Arm Frame Pin
17	1	900-100-115	Top Scissor Arm Pin
18	2	900-100-116	Walking Beam Pin
19	1	900-100-117	Bale Bumper
20	1	900-100-118	Left Rear Bale Guide
21	1	900-100-119	Right Rear Bale Guide
22	1	900-100-120	Loader Arm Cylinder
23	2	900-100-121	Short Pivot Pin (Deck)
24	2	900-100-122	Long Pivot Pin (Loader)
25	1	900-100-135	Selector Valve
26	4	900-100-136	Counter Weight

Tubeline Techno-Bale
Main Assy

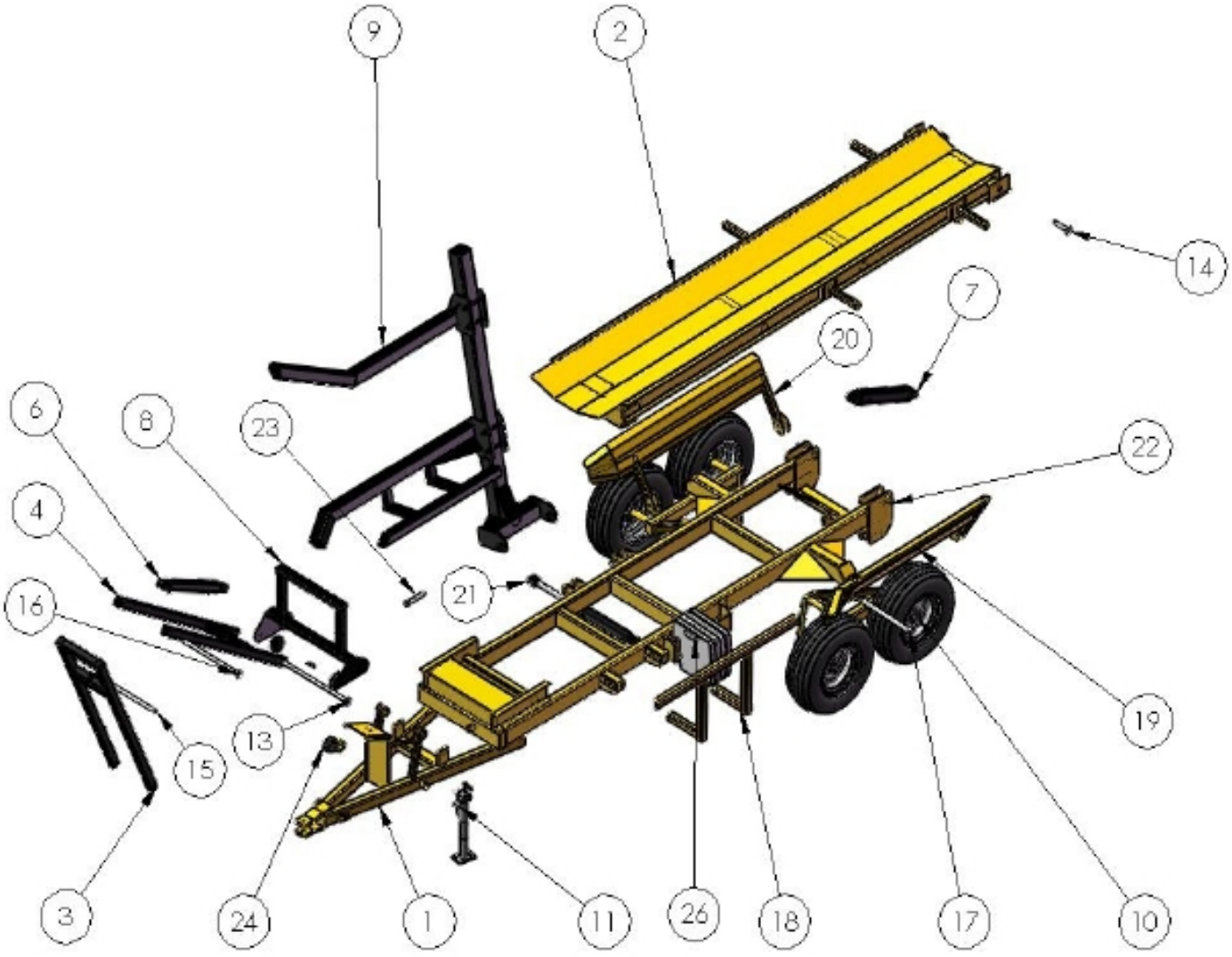

Techno-Bale
Bale Arm

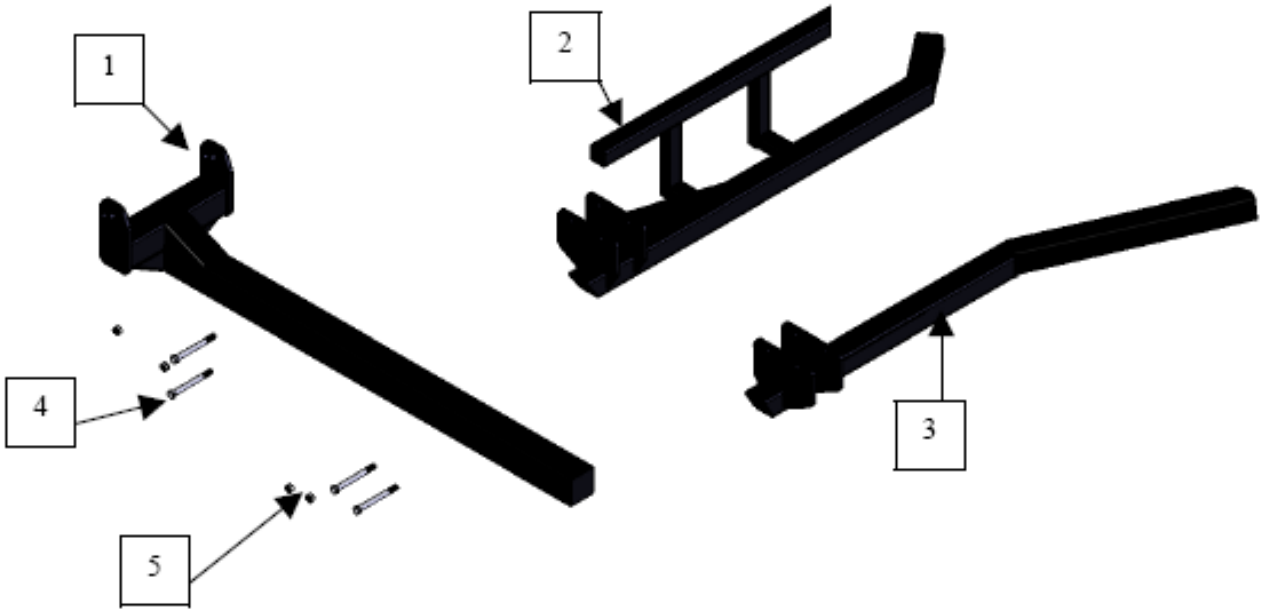

Item No	Qty	Part Number	Description
1	1	900-100-123	Bale Arm
2	1	900-100-124	Inside Bale Finger
3	1	900-100-125	Outside Bale Finger
4	4		¾-10 x 8 Bolt
5	4		¾-10 Nut

Techno-Bale
Bale Carriage

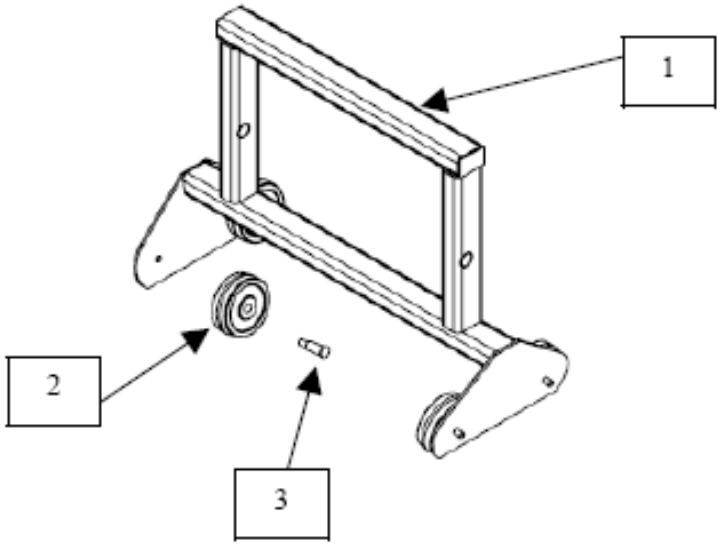

Item No	Qty	Part Number	Description
1	1	900-100-126	Carriage Ram
2	4	900-100-127	Carriage Wheel
3	4	900-100-128	Carriage Wheel Axle

Techno-Bale
Walking Beam

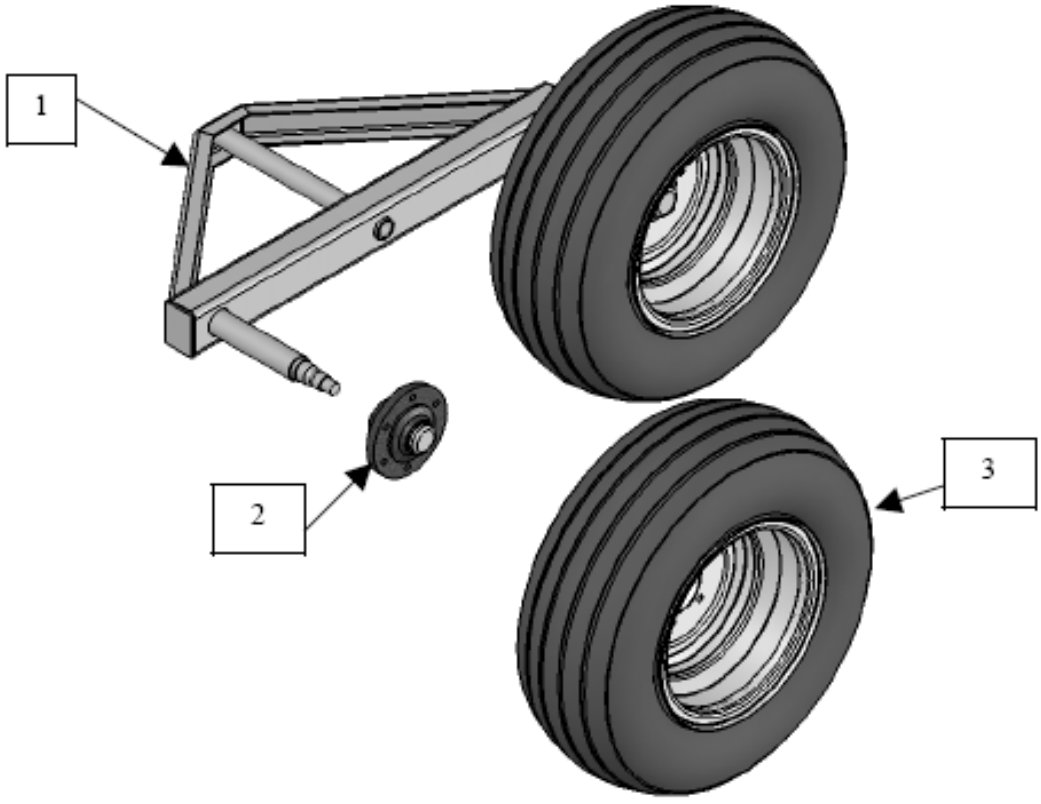

Item No	Qty	Part Number	Description
1	2	900-100-131	Walking Beam
2	4	900-100-129	Hub
3	4	900-100-130	Wheels

Techno-Bale
Rear Table Extension

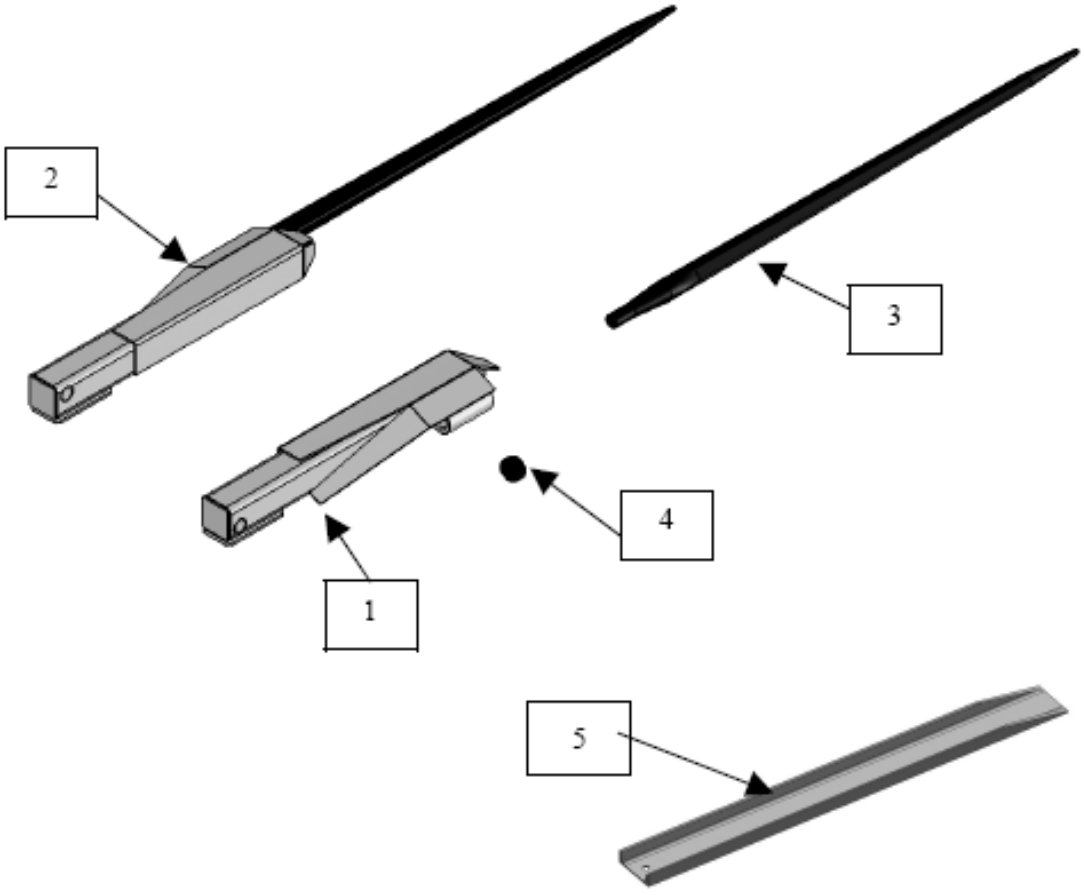

Item No	Qty	Part Number	Description
1	1	900-100-140	26" Rear Table Extension R
2	1	900-100-141	26" Rear Table extension L
3	2	900-100-133	Conus 2 Spear
4	2	900-100-134	Conus 2 Nut
5	2	900-100-137	Vertical stack Fork
		900-100-190	900 6' Bale Kit
		960-100-191	45" Right 6' Bale Extension
		960-100-192	45" Left 6' Bale Extension