JAY•LOR®

Cutter • Mixer • Feeder

PARTS BOOK

MODEL 2725

"Putting the 'Total' into TMR"

JAY-LOR® Fabricating Inc.
RR # 2 Orton, Ontario, Canada, L0N 1N0 Tel: (519) 787-9353 Fax: (519) 787-7053

169-05-03

JAY•LOR®

Cutter • Mixer • Feeder

PARTS BOOK

Effective: December 1, 2000

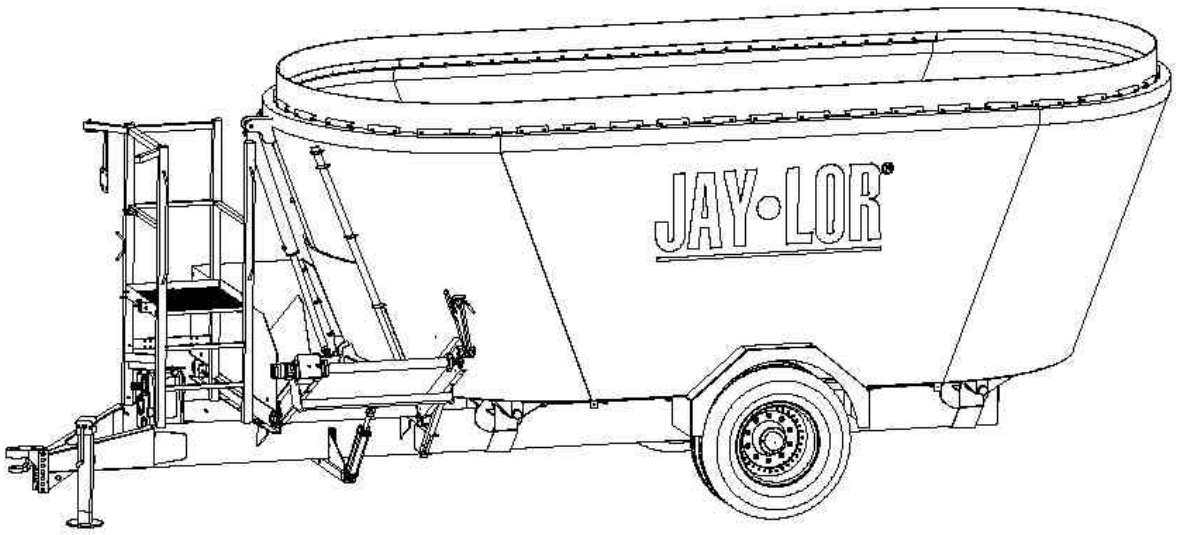

MODEL 2725

"Putting the 'Total' into TMR"

JAY-LOR® Fabricating Inc.
RR # 2 Orton, Ontario, Canada, L0N 1N0 Tel: (519) 787-9353 Fax: (519) 787-7053

169-05-03

FOREWORD

This Dealer Copy of the Parts Book contains common and general information applicable to the JAY•LOR® Model 2725 Cutter-Mixer-Feeder. It has been carefully designed to ensure that correct and accurate information is portrayed in every area of a typical unit, enabling efficient and effective service to the end user of JAY•LOR® Fabricating Inc.'s products.

The format of this book consists of a fundamental breakdown of components and assemblies according to the area in which they are located or function on the machine. Each area or section contains illustrative information regarding a part or an assembly, along with information such as part numbers and quantities included. At the end of each section a Price List is found containing Dealer and Suggested List prices for the most common service items pertaining to that section. For details and pricing information regarding parts and assemblies depicted in the illustrations but not included in the price lists, please contact JAY•LOR® Fabricating Inc. Our service personnel will be more than willing to assist you in obtaining information as it pertains to JAY•LOR® Fabricating Inc.'s line of products. Information and pricing for non-stock and/or custom items will be quoted on request.

Note:

Parts and assemblies in this book may not be exactly as shown. JAY•LOR® Fabricating Inc. reserves the right to make any changes/revisions/amendments at any time as deemed necessary to ensure that correct information is provided.

Price Lists are prepared for the most common parts and assemblies only, and are subject to change at any time, without notice. JAY•LOR® Fabricating Inc. will do its utmost to provide the latest information regarding our products. To ensure that the most recent information is available, please contact JAY•LOR® Fabricating Inc. **All prices in effect as of the date specified on the cover page of this book.**

Contact us at:

JAY•LOR®
Fabricating Inc
R.R.#2
Orton, ON
Canada
L0N 1N0

Phone:	**(519) 787-9353**
Toll-Free:	**(800) 809-8224**
Fax:	**(519) 787-7053**
e-mail:	jaylor@jaylor.com
on the web:	www.jaylor.com

GENERAL INFORMATION

The JAY•LOR® Model 2725 is the latest addition to the twin auger model series. While several new features are found in the JAY•LOR® Model 2725, many areas of this machine are derivatives from the JAY•LOR® Model 2350. Features such as the auger, discharge options, etc. may be interchangeable. For information and assistance regarding similarities and/or differences between the JAY•LOR® Model 2725 and other JAY•LOR® Products, please contact JAY•LOR® Fabricating Inc.

It is important to use extreme caution when performing any type of service to this equipment. General information regarding service procedures and intervals is covered in the Operator's Manual provided with the new product. For more specific product service, please contact JAY•LOR® Fabricating Inc. to obtain Technical Service Bulletins that outline the procedures and requirements for such. Please note that additional copies or replacements for any of this documentation can be ordered through JAY•LOR® Fabricating Inc.

It is also important to ensure that only JAY•LOR® genuine or approved parts are to be used where applicable. Mismatched or incorrect components can result in machine damage or malfunction, or possibly personal injury.

PART NUMBERING SYSTEM

JAY•LOR® Fabricating Inc. uses a 7-digit Part Numbering System for identification of parts and assemblies used in the products we manufacture. Please refer to the machine diagram at the end of this section for details on how numbers are applied according to the area of the machine in which they are found.

ORDERING INFORMATION

Ordering components for JAY•LOR® products is simple. We ask that you complete a Parts Order Form, a copy of which is attached with this book. If unclear about any of the parts or assemblies found throughout this book, please contact JAY•LOR® Fabricating Inc.

It is important to include the machine model and serial numbers when ordering parts if applicable. The serial number plate is located on the frame of the machine as indicated in the diagram below:

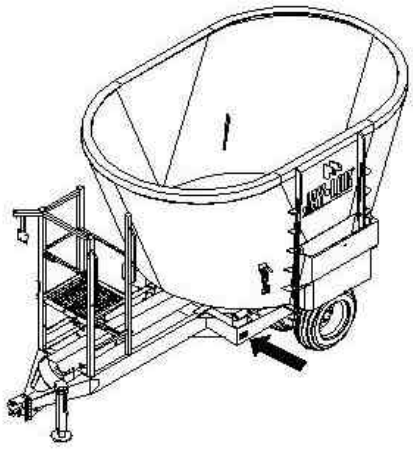

In order to ship your order correctly and promptly be sure to state clearly the part numbers and descriptions. Shipping instructions, including any special routing should be given. If you make reference to a previous shipment, please refer to the invoice number and date.

JAY·LORâ Fabricating Inc. will only process Parts Orders that have been received via facsimile or e-mail.

INVOICING TERMS AND CONDITIONS

Pricing:

For parts or assemblies sold and not associated with the sale of a JAY•LOR® mixer, prices as per Parts Book will be used (Dealer or Suggested List).

For parts or assemblies sold as extra parts or options (i.e. not listed in the JAY•LOR® Fabricating Inc. Sales Book), prices as per Parts Book will be used (Dealer or Suggested List).

Terms:

Net 30 Days, FOB JAY•LOR® Fabricating Inc. applies to accounts in good standing. Overdue accounts will be charged 2% per month. All goods remain property of JAY•LOR® Fabricating Inc. until paid in full.

WARRANTY

On Goods Ordered:

Our guarantee of products made or sold by us is limited to an agreement to repair or replacement without charge any item found defective in workmanship or material upon receipt. No claims will be allowed for labour or consequent damages.

Any part, assembly, component, etc. that has been installed and/or replaced according to specifications established by JAY•LOR® Fabricating Inc. will be warranted under the JAY•LOR® Fabricating Inc. Limited Warranty (Machine). Please refer to the procedures set out with this documentation for details on warranty coverage.

JAY·LORâ Fabricating Inc. Limited Warranty (Machine):

If parts and/or assemblies are ordered under the terms of JAY•LOR® Fabricating Inc.'s Limited Warranty (as applied to the machine with date of purchase), please follow the procedures set out with this documentation to process a claim.

EXCHANGED/RETURNED GOODS

Do not return any goods without first obtaining our permission. Whenever possible, JAY•LOR® Fabricating Inc. will accommodate customers by accepting returns provided that products have not been used or damaged. Please contact JAY•LOR® Fabricating Inc. to obtain a Return Goods Acquisition Number (RGA #).

Please note that any extra shipping, brokerage, and handling charges incurred are the responsibility of the customer.

Returned Goods - Unused:

The price paid for goods upon return to JAY•LOR® Fabricating Inc. will be credited the price paid less 20%.

Returned Goods – Used:

The return of used goods is normally not accepted by JAY•LOR® Fabricating Inc. Individual cases may be approved upon decision by the JAY•LOR® Warranty Administrator.

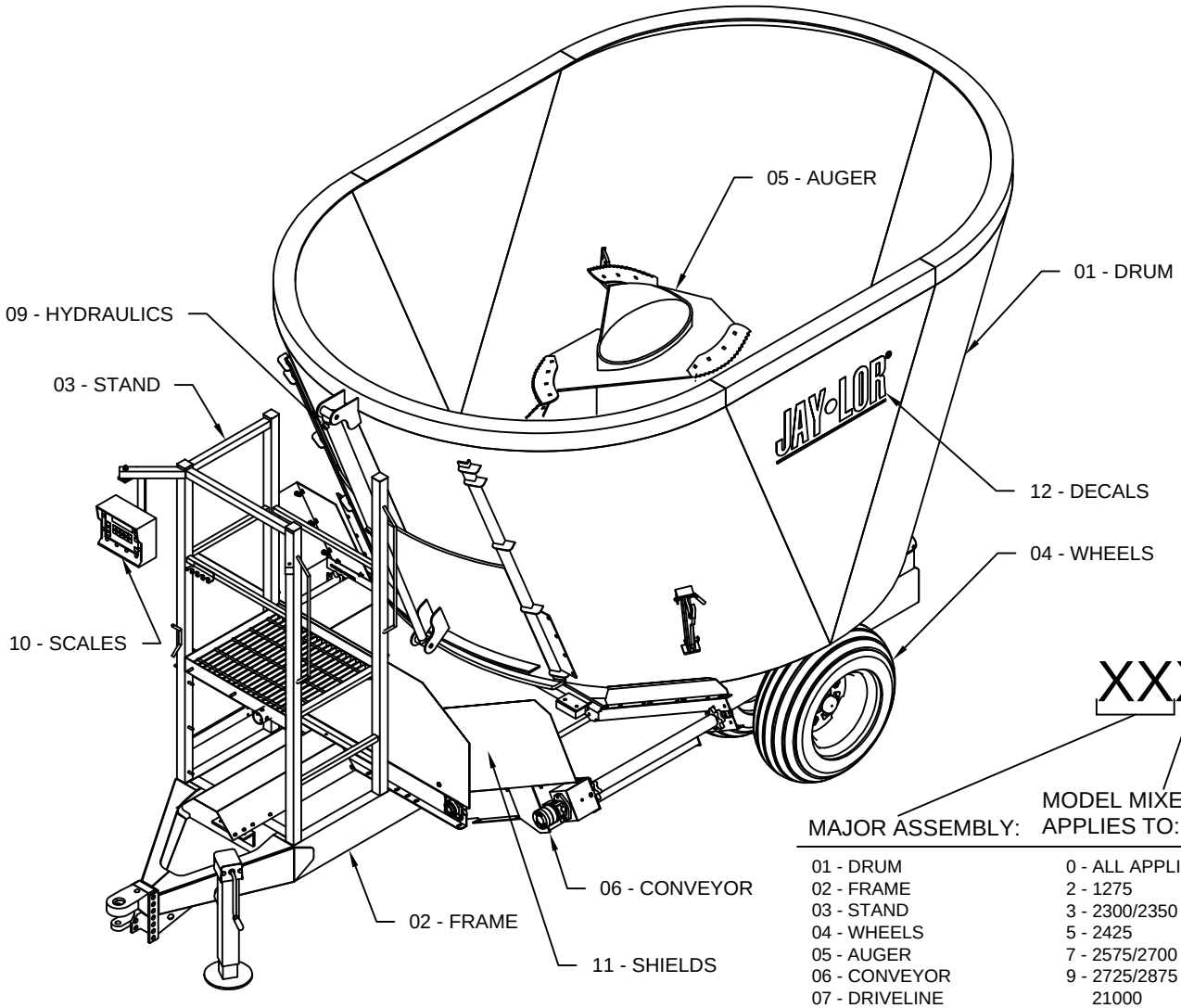

XXX - XX - XX

MAJOR ASSEMBLY:	MODEL MIXER PART APPLIES TO:	SUBASSEMBLY:	PART #:
01 - DRUM	0 - ALL APPLICABLE	00 - NO SUBASSEMBLY	00 - INCLUDES ALL PARTS IN SUBASSEMBLY
02 - FRAME	2 - 1275	XX - SUBASSEMBLY #	XX - PART #
03 - STAND	3 - 2300/2350		
04 - WHEELS	5 - 2425		
05 - AUGER	7 - 2575/2700		
06 - CONVEYOR	9 - 2725/2875		
07 - DRIVELINE	21000		
08 - LUBE SYSTEM			
09 - HYDRAULICS			
10 - SCALES			
11 - SHIELDS			
12 - DECALS			
13 - MISCELLANEOUS			
14 - BOLTS AND FASTENERS			
15 - CAPS AND SPECIAL FASTENERS			
16 - MANUALS, BULLETINS, & BROCHURES			

DRAWN BY: D. RODGERS	DATE: JUN 7/00
MODEL: ALL APPLICABLE	SHEET: 1 of 1
PART/ASSEMBLY NO: 160-00-01	

TITLE: PART NUMBERING SYSTEM AND CORRESPONDING LOCATION DIAGRAM FOR TYPICAL UNITS

JAY•LOR Fabricating Inc

JAY•LOR®

TABLE OF CONTENTS

SECTION DESCRIPTION	SECTION
Front Door Discharge, Center-Side Door Discharge Drum Assemblies, Restrictor Blades, etc.,	01 – DRUM
Frame Assembly, Hitch, Jack, etc.,	02 – FRAME
Stand Frame Assembly, Scale Indicator Mount, etc.,	03 – STAND
Tires, Rims, Tubes, Axle Spindles, Hubs, Bearings, etc.,	04 – WHEELS
Auger Assembly, Knives, Angling Blades, etc.,	05 – AUGER
Conveyor Assemblies, Apron Chain, Drive and Idler Shafts, Bearings, Chain Couplers, Hydraulic Motors, Magnet Chutes, etc.,	06 – CONVEYOR
Planetary Gearboxes, Transmissions, Driveshafts, P.T.O. Shafts, Bearings, etc.,	07 – DRIVELINE
Oil Reservoirs, Grease Lines, etc.,	08 – LUBE SYSTEM
Cylinders, Motors, Hose Kits, Valves, Fittings, etc.,	09 – HYDRAULICS
Scale Indicators, Weighbars, Power Cords, etc.,	10 – SCALES
Conveyor Shield Assemblies, Driveline Shielding, Special Guards, etc.,	11 – SHIELDS
O.E.M. Decals, Safety Decals, etc.,	12 – DECALS
Parts Order Forms, Warranty Request Forms, etc.,	SERVICE DEPARTMENT DOCUMENTS/FORMS

JAY•LOR®

Cutter • Mixer • Feeder

01 - DRUM

JAY-LOR® Fabricating Inc.
RR # 2 Orton, Ontario, Canada, L0N 1N0 Tel: (519) 787-9353 Fax: (519) 787-7053

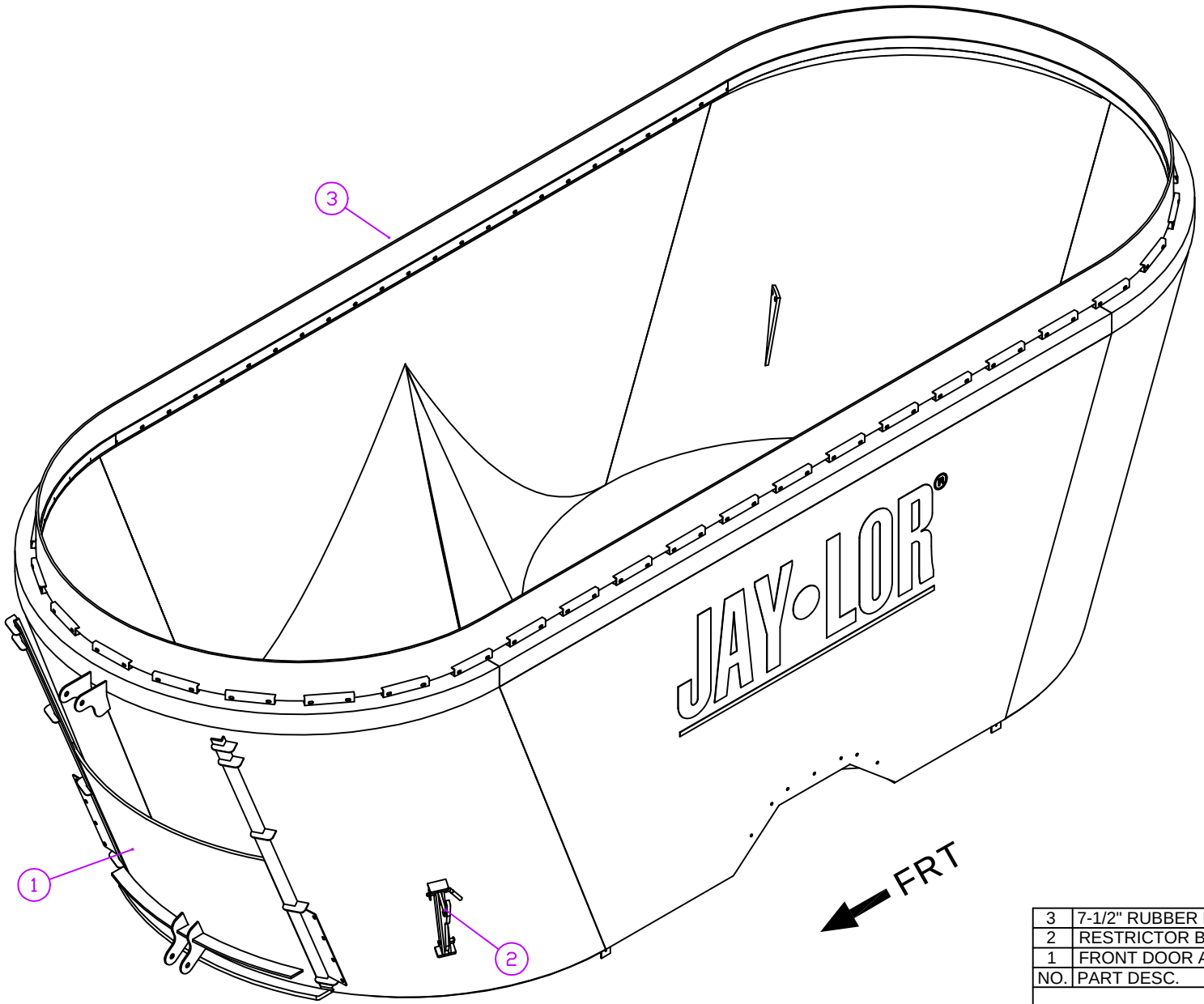

NO.	PART DESC.	QTY	PART NO.
3	7-1/2" RUBBER EXTENSION ASSEMBLY	1	019-09-04
2	RESTRICTOR BLADE ASSEMBLY	2	019-11-01
1	FRONT DOOR ASSEMBLY	1	019-10-04

PARTS LIST

DRAWN BY: D. RODGERS

DATE: DEC 1/00

MODEL: 2725

SHEET: 1 of 1

PART/ASSEMBLY NO: 019-06-04

TITLE: MODEL 2725 FRONT DISCHARGE DRUM ASSEMBLY COMPONENTS

JAY-LOR Fabricating Inc

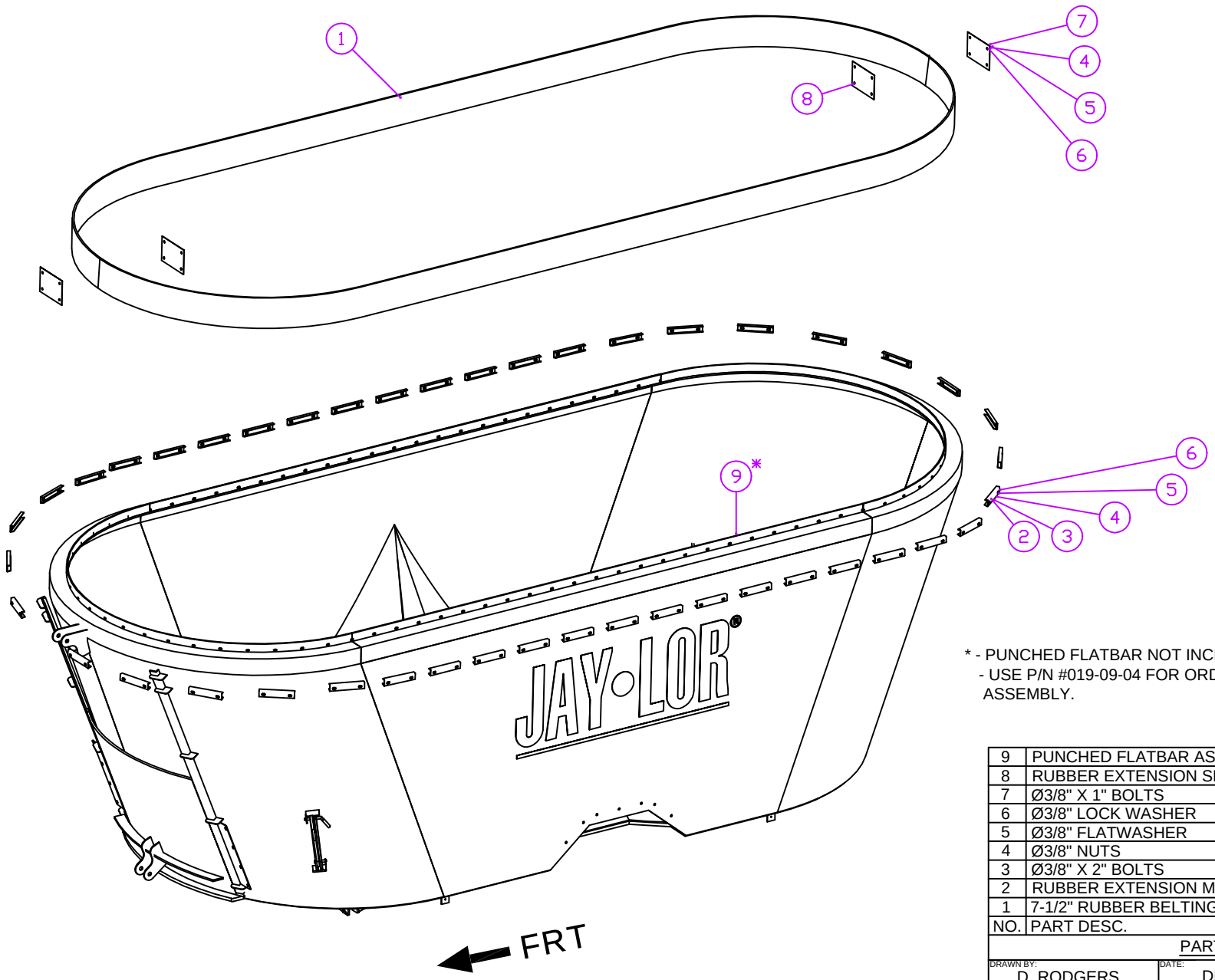

* - PUNCHED FLATBAR NOT INCLUDED W/ ASSEMBLY.
- USE P/N #019-09-04 FOR ORDERING PUNCHED FLATBAR ASSEMBLY.

NO.	PART DESC.	QTY	PART NO.
9	PUNCHED FLATBAR ASSEMBLY*	1	019-09-04
8	RUBBER EXTENSION SPLICE PLATE	4	010-00-54
7	Ø3/8" X 1" BOLTS	8	140-00-12
6	Ø3/8" LOCK WASHER	96	140-00-71
5	Ø3/8" FLATWASHER	96	140-00-66
4	Ø3/8" NUTS	96	140-00-85
3	Ø3/8" X 2" BOLTS	88	140-00-13
2	RUBBER EXTENSION MOUNTING CLIP	44	010-00-47
1	7-1/2" RUBBER BELTING (22'-5" LONG)	2	017-02-50

PARTS LIST

DRAWN BY: D. RODGERS
DATE: DEC 18/00
MODEL: 2725
SHEET: 1 of 1
PART/ASSEMBLY NO: 019-09-04

TITLE: 7-1/2" RUBBER EXTENSION ASSEMBLY OPTION FOR MODEL 2725

JAY•LOR® Fabricating Inc

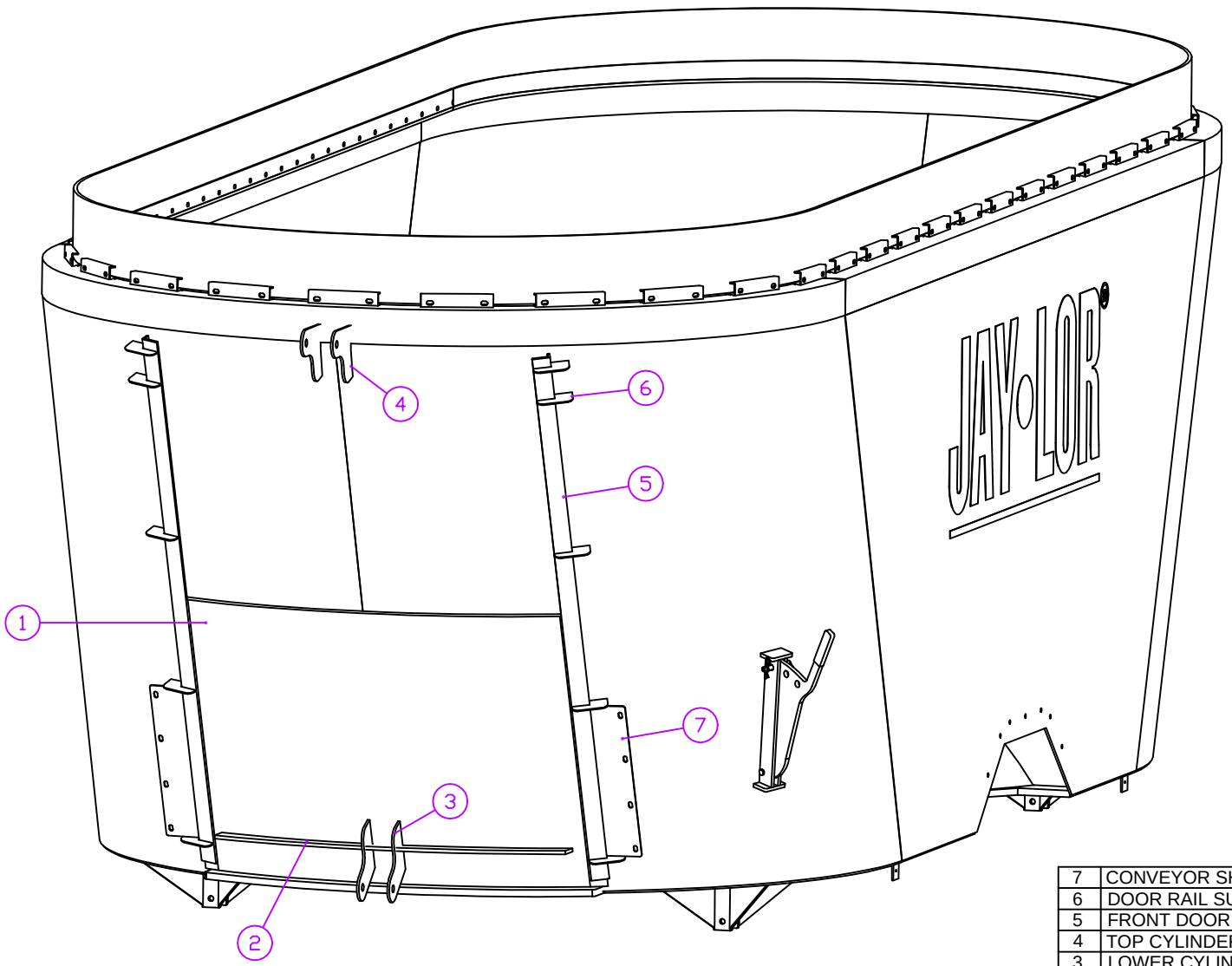

NO.	PART DESC.	QTY	PART NO.
7	CONVEYOR SHIELD MOUNT	2	010-00-16
6	DOOR RAIL SUPPORT CLIPS	10	010-00-62
5	FRONT DOOR RAILS (ONE-PIECE)	2	010-07-02
4	TOP CYLINDER BRACKET	2	010-00-22
3	LOWER CYLINDER BRACKET	2	010-00-23
2	ROLLED FLATBAR REINFORCEMENT	1	010-00-06
1	FRONT DOOR (ONE-PIECE)	1	013-00-04

PARTS LIST

DRAWN BY: D. RODGERS
DATE: DEC 18/00
MODEL: 2725
SHEET: 1 of 1
PART/ASSEMBLY NO: 019-10-04

TITLE: MODEL 2725 FRONT DISCHARGE DOOR ASSEMBLY

JAY•LOR Fabricating Inc

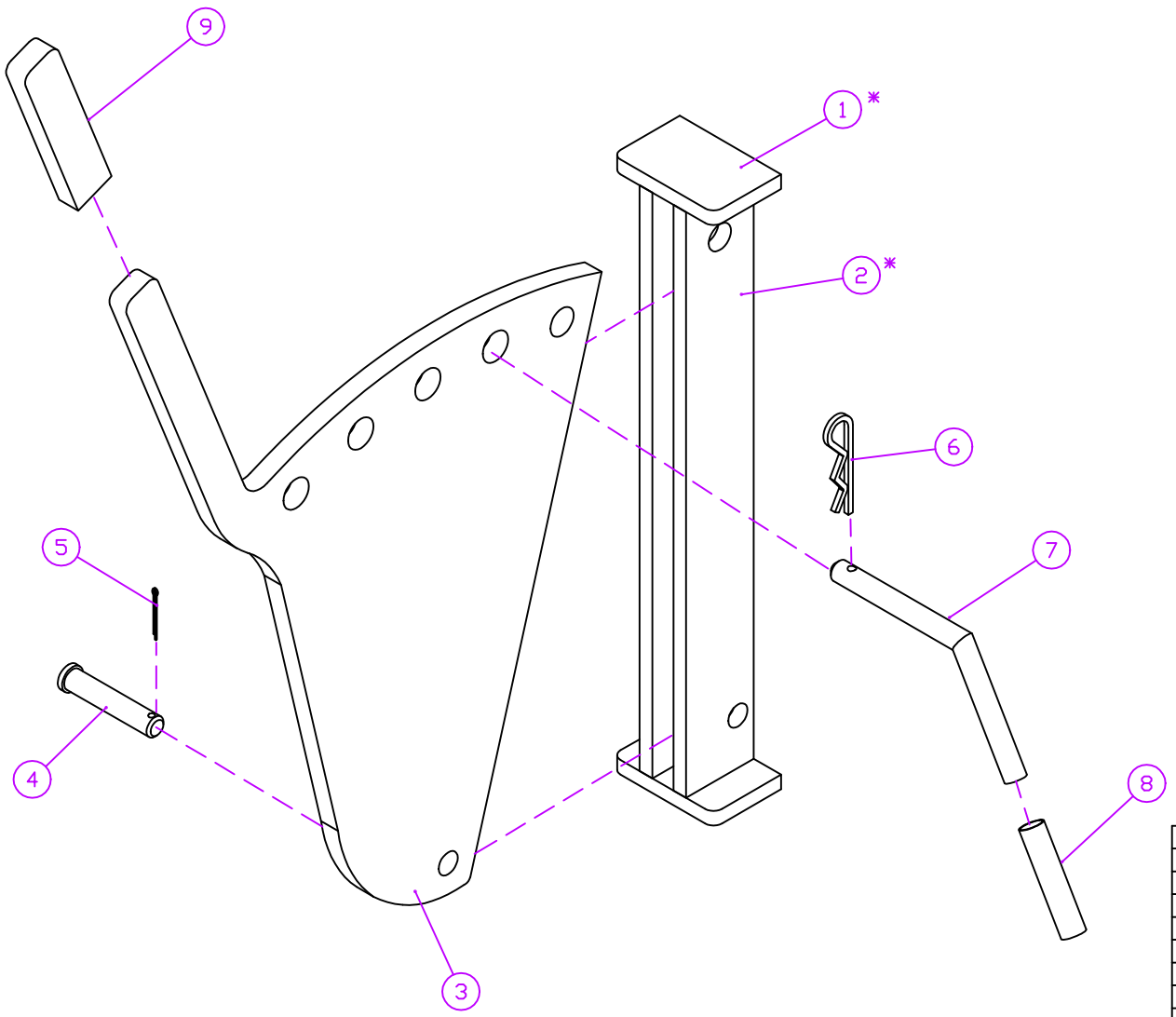

* - NOT INCLUDED W/ ASSEMBLY

NO.	PART DESC.	QTY	PART NO.
9	RESTRICTOR BLADE GRIP	1	150-00-03
8	ADJUSTMENT PIN CAP	1	150-00-02
7	ADJUSTMENT PIN	1	010-01-08
6	HAIRPIN	1	010-01-07
5	COTTER PIN	1	010-01-06
4	BOTTOM PIVOT PIN	1	010-01-04
3	RESTRICTOR BLADE	1	010-01-02
2	SIDE BRACKETS*	2	010-02-02
1	END PLATES*	2	010-02-01

PARTS LIST

DRAWN BY: D. RODGERS

DATE: DEC 18/00

MODEL: 2725

SHEET: 1 of 1

PART/ASSEMBLY NO: 019-11-01

TITLE: STANDARD RESTRICTOR BLADE ASSEMBLY

JAY•LOR Fabricating Inc

JAY•LOR®

Cutter • Mixer • Feeder

02 - FRAME

"Putting the 'Total' into TMR"

JAY-LOR® Fabricating Inc.
RR # 2 Orton, Ontario, Canada, L0N 1N0 Tel: (519) 787-9353 Fax: (519) 787-7053

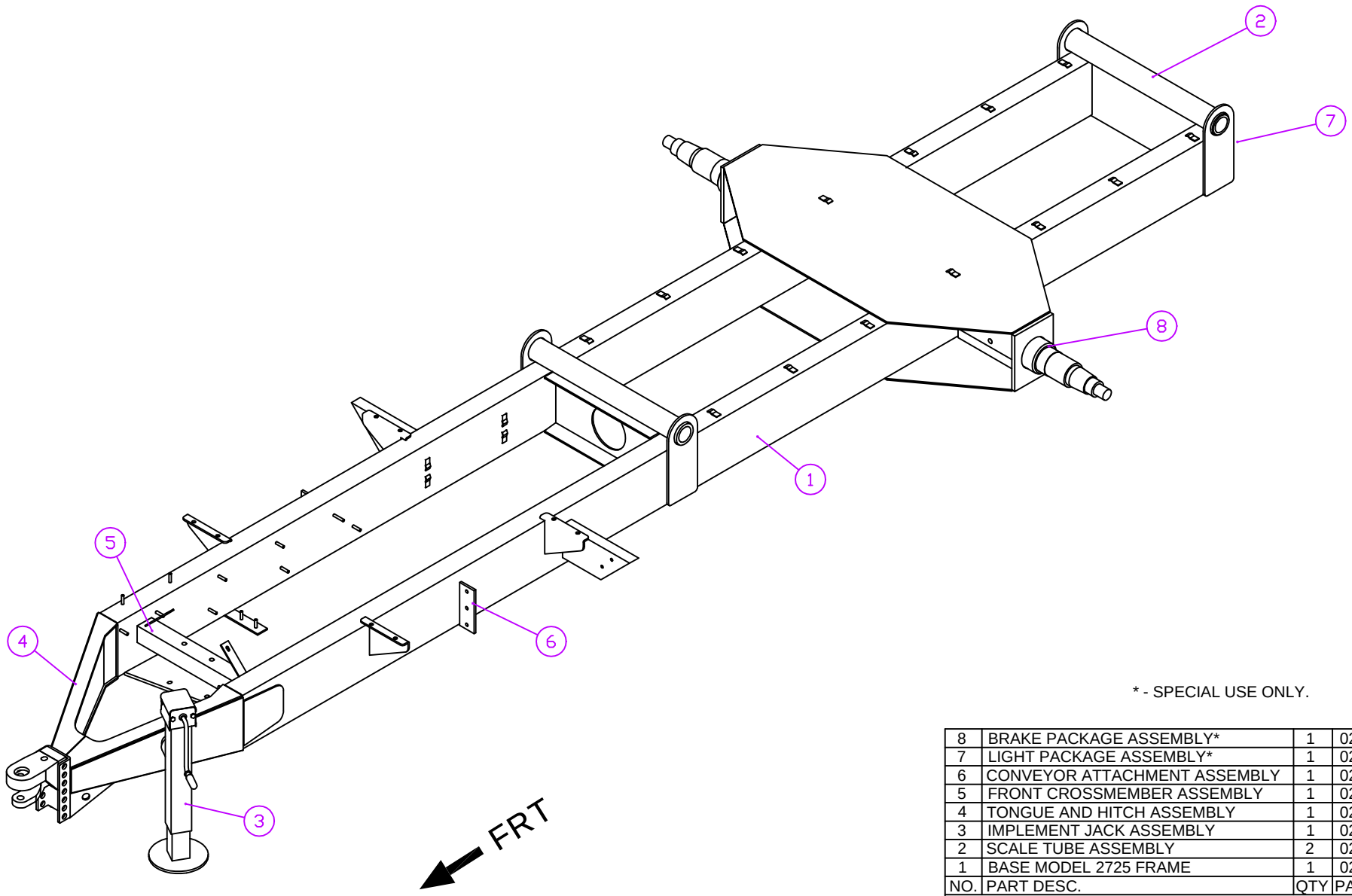

* - SPECIAL USE ONLY.

NO.	PART DESC.	QTY	PART NO.
8	BRAKE PACKAGE ASSEMBLY*	1	029-13-04
7	LIGHT PACKAGE ASSEMBLY*	1	029-20-04
6	CONVEYOR ATTACHMENT ASSEMBLY	1	029-08-04
5	FRONT CROSSMEMBER ASSEMBLY	1	029-15-04
4	TONGUE AND HITCH ASSEMBLY	1	029-12-03
3	IMPLEMENT JACK ASSEMBLY	1	020-02-01
2	SCALE TUBE ASSEMBLY	2	029-14-04
1	BASE MODEL 2725 FRAME	1	029-06-04

PARTS LIST

DRAWN BY: D. RODGERS	DATE: DEC 18/00
MODEL 2725	SHEET 1 of 1
PART/ASSEMBLY NO: 029-05-04	

TITLE: MODEL 2725 COMPLETE FRAME ASSEMBLY

JAY•LOR Fabricating Inc

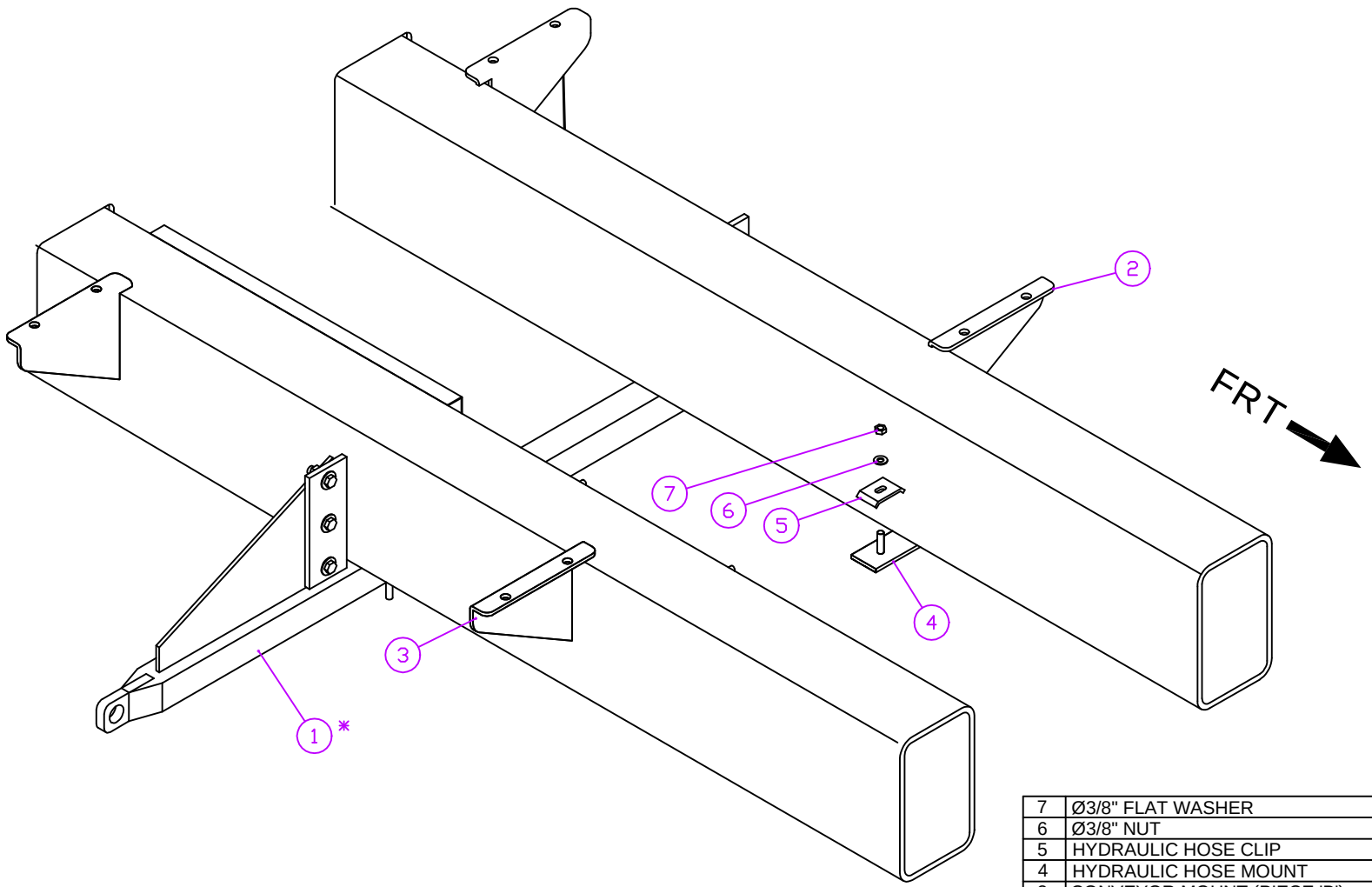

NO.	PART DESC.	QTY	PART NO.
7	Ø3/8" FLAT WASHER	1	140-00-66
6	Ø3/8" NUT	1	140-00-85
5	HYDRAULIC HOSE CLIP	1	020-00-09
4	HYDRAULIC HOSE MOUNT	2	020-00-13
3	CONVEYOR MOUNT (PIECE 'B')	2	027-00-12
2	CONVEYOR MOUNT (PIECE 'A')	2	027-00-11
1	UNDERCARRIAGE BAR ASSEMBLY	1*	020-03-01

PARTS LIST

* - 2 REQUIRED FOR DUAL CYLINDER LIFT KIT (WING EXTENSION CONVEYORS OVER 41" OVERALL LENGTH).
- DELETE ASSEMBLY #020-03-01 IF DUAL DIRECTION DISCHARGE CONVEYOR OPTION SPECIFIED.

DRAWN BY: D. RODGERS	DATE: DEC 18/00
MODEL 2725	SHEET 1 of 1
PART/ASSEMBLY NO: 029-08-04	

TITLE: CONVEYOR ATTACHMENT ASSEMBLY FOR MODEL 2725

JAY•LOR Fabricating Inc

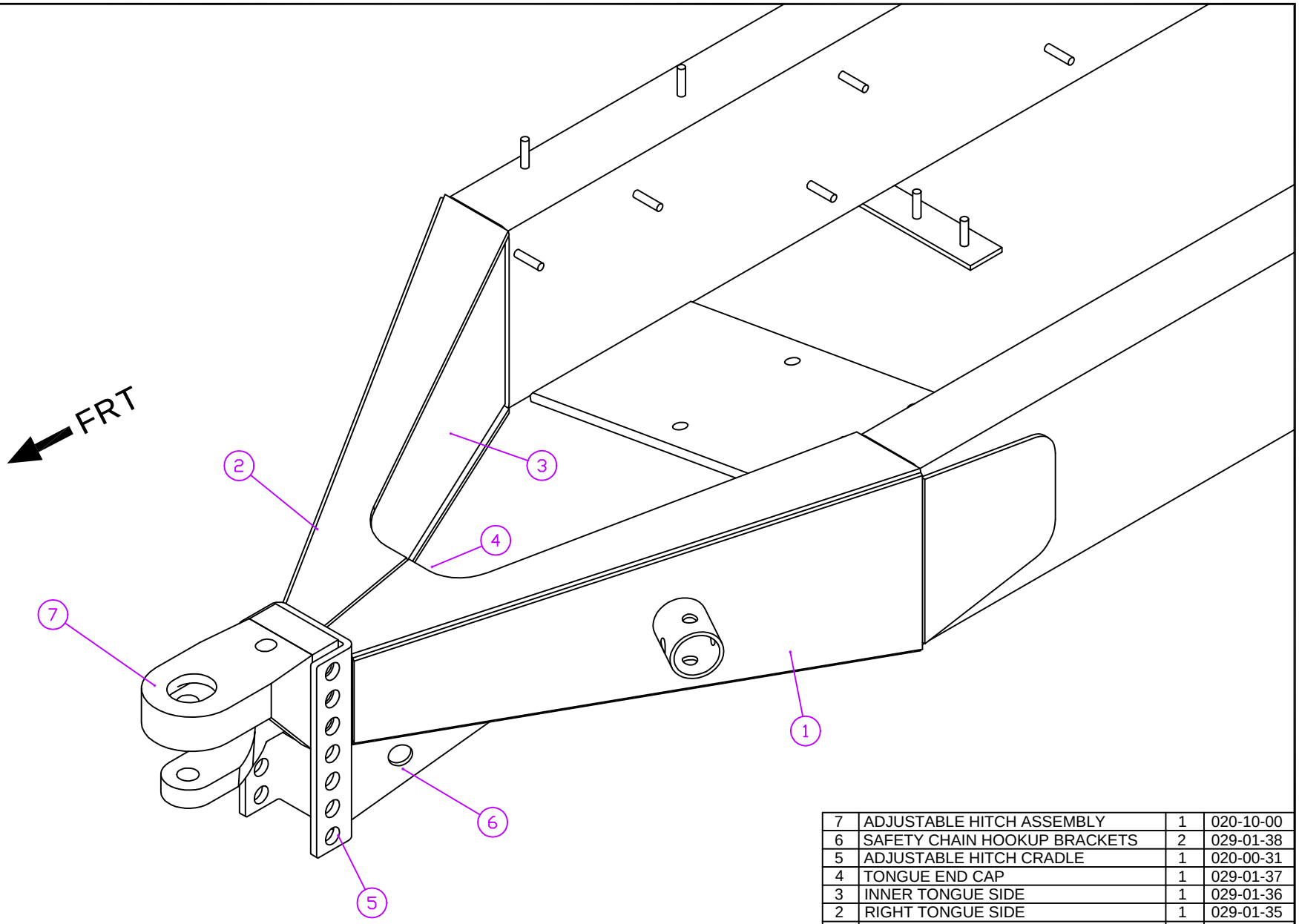

NO.	PART DESC.	QTY	PART NO.
7	ADJUSTABLE HITCH ASSEMBLY	1	020-10-00
6	SAFETY CHAIN HOOKUP BRACKETS	2	029-01-38
5	ADJUSTABLE HITCH CRADLE	1	020-00-31
4	TONGUE END CAP	1	029-01-37
3	INNER TONGUE SIDE	1	029-01-36
2	RIGHT TONGUE SIDE	1	029-01-35
1	LEFT TONGUE SIDE	1	029-01-34

PARTS LIST

DRAWN BY: D. RODGERS

DATE: DEC 18/00

MODEL: 2725

SHEET: 1 of 1

PART/ASSEMBLY NO: 029-12-03

JAY•LOR Fabricating Inc

TITLE: TONGUE AND HITCH ASSEMBLY FOR MODEL 2725

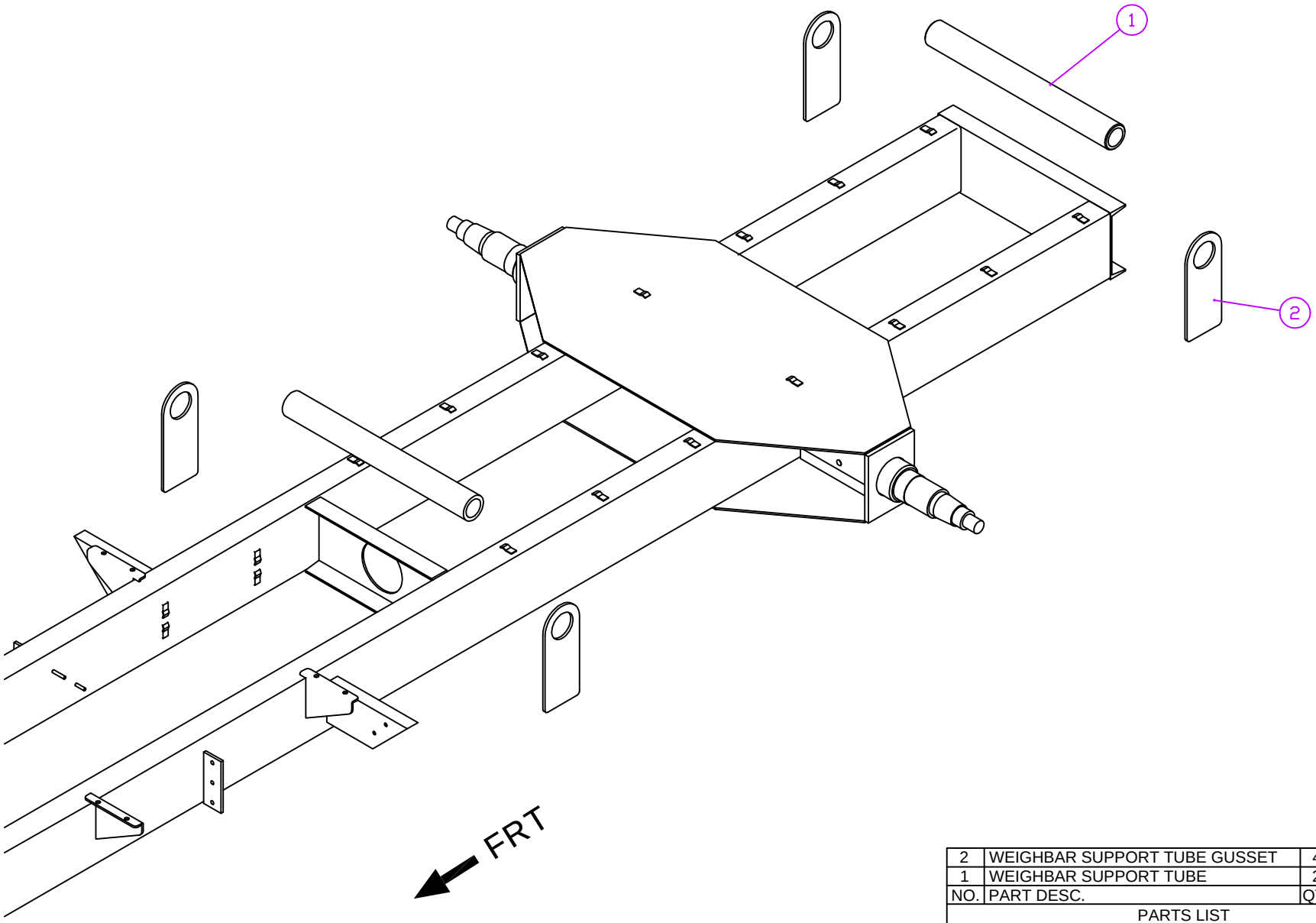

NO.	PART DESC.	QTY	PART NO.
2	WEIGHBAR SUPPORT TUBE GUSSET	4	029-03-09
1	WEIGHBAR SUPPORT TUBE	2	029-03-15

PARTS LIST

DRAWN BY: D. RODGERS	DATE: DEC 18/00
MODEL: 2725	SHEET: 1 of 1
PART/ASSEMBLY NO: 029-14-04	

TITLE: SCALE TUBE ASSEMBLY FOR MODEL 2725 (TRAILER MODELS)

JAY•LOR Fabricating Inc

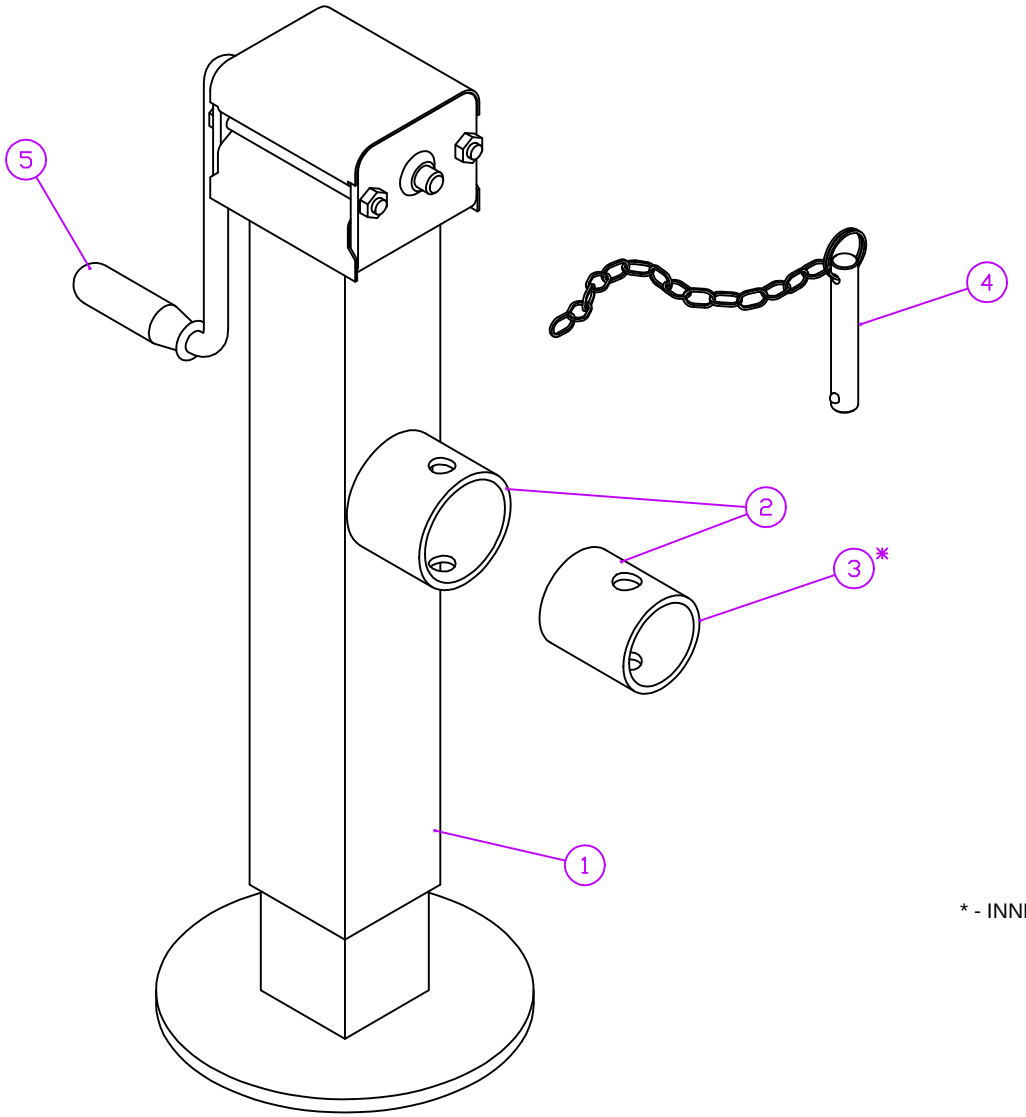

* - INNER SLEEVE W/ PART NUMBER 030-00-19 SAME AS 020-02-04

NO.	PART DESC.	QTY	PART NO.
5	IMPLEMENT JACK HANDLE ASSEMBLY	1	020-02-06
4	PIN AND CHAIN KIT	1	020-02-05
3	(1) INNER SLEEVE*	1	020-02-04
2	(2) INNER & (1) OUTER SLEEVE KIT	1	020-02-03
1	IMPLEMENT JACK W/ HANDLE	1	020-02-02

PARTS LIST

DRAWN BY: D. RODGERS

DATE: MAY 5/00

MODEL: ALL APPLICABLE

SHEET: 1 of 1

PART/ASSEMBLY NO: 020-02-01

TITLE: IMPLEMENT JACK ASSEMBLY

JAY•LOR Fabricating Inc

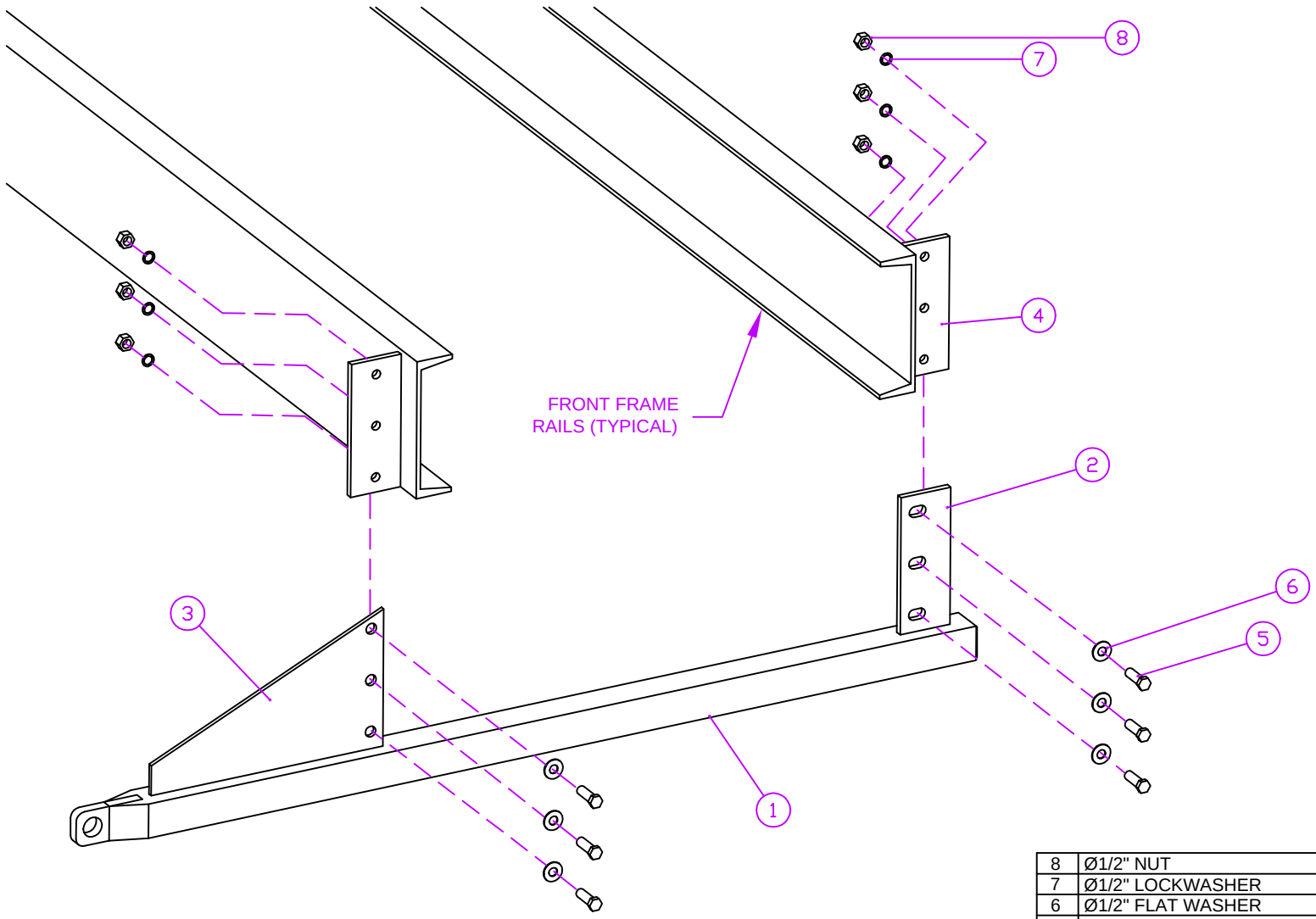

NOTE:

- 2 UNDERCARRIAGE BAR ASSEMBLIES REQUIRED FOR DUAL CYLINDER LIFT KIT.
- DUAL CYLINDER LIFT KIT USED ON MODELS EQUIPPED W/ WING EXTENSION CONVEYORS OVER 41" OVERALL LENGTH.

NO.	PART DESC.	QTY	PART NO.
8	Ø1/2" NUT	6	140-00-76
7	Ø1/2" LOCKWASHER	6	140-00-72
6	Ø1/2" FLAT WASHER	6	140-00-67
5	Ø1/2" X 1-1/2" BOLT	6	140-00-24
4	UNDERCARRIAGE BAR MOUNT	2	020-00-04
3	TRIANGULAR SUPPORT PLATE	1	020-00-06
2	SUPPORT PLATE	1	020-00-05
1	WING LIFT SUPPORT TUBE	1	020-00-03

PARTS LIST

DRAWN BY: D. RODGERS
DATE: MAY 8/00
MODEL: ALL APPLICABLE
SHEET: 1 of 1
PART/ASSEMBLY NO: 020-03-01

TITLE: UNDERCARRIAGE BAR ASSEMBLY FOR MODELS EQUIPPED W/ WING EXTENSION CONVEYORS

JAY•LOR Fabricating Inc

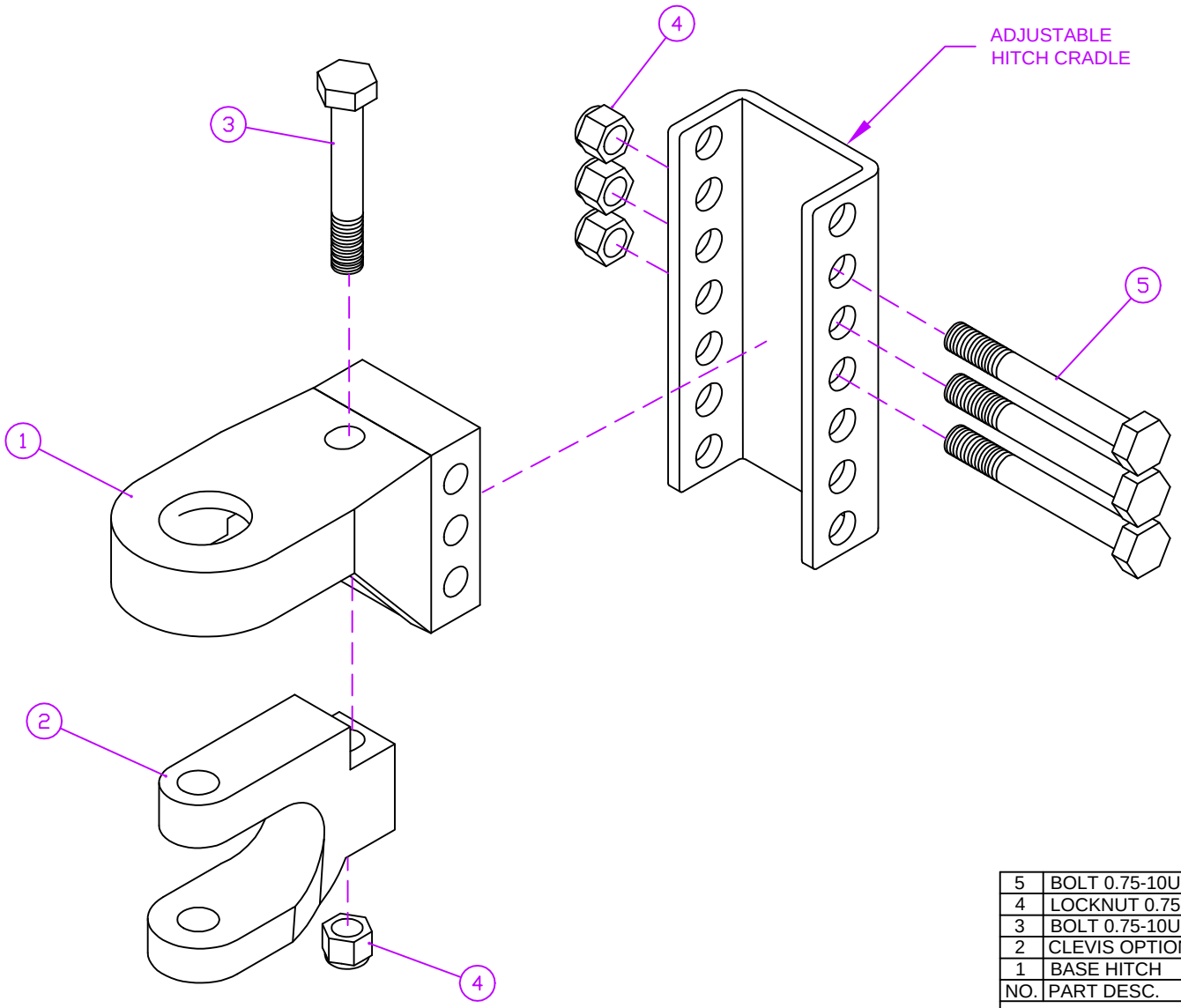

NO.	PART DESC.	QTY	PART NO.
5	BOLT 0.75-10UNC X 6.00 LG HEX HEAD	3	020-10-05
4	LOCKNUT 0.75-10UNC HEX (GRD 8)	4	020-10-04
3	BOLT 0.75-10UNC X 5.00 LG HEX HEAD	1	020-10-03
2	CLEVIS OPTION	1	020-10-02
1	BASE HITCH	1	020-10-01

PARTS LIST

DRAWN BY: D. RODGERS
DATE: MAY 9/00
MODEL: ALL APPLICABLE
SHEET: 1 of 1
PART/ASSEMBLY NO: 020-10-00

JAY•LOR Fabricating Inc

TITLE: ADJUSTABLE HITCH ASSEMBLY - INCLUDES BASE HITCH AND CLEVIS OPTION

JAY•LOR®

Cutter • Mixer • Feeder

03 - STAND

"Putting the 'Total' into TMR"

JAY-LOR® Fabricating Inc.
RR # 2 Orton, Ontario, Canada, L0N 1N0 Tel: (519) 787-9353 Fax: (519) 787-7053

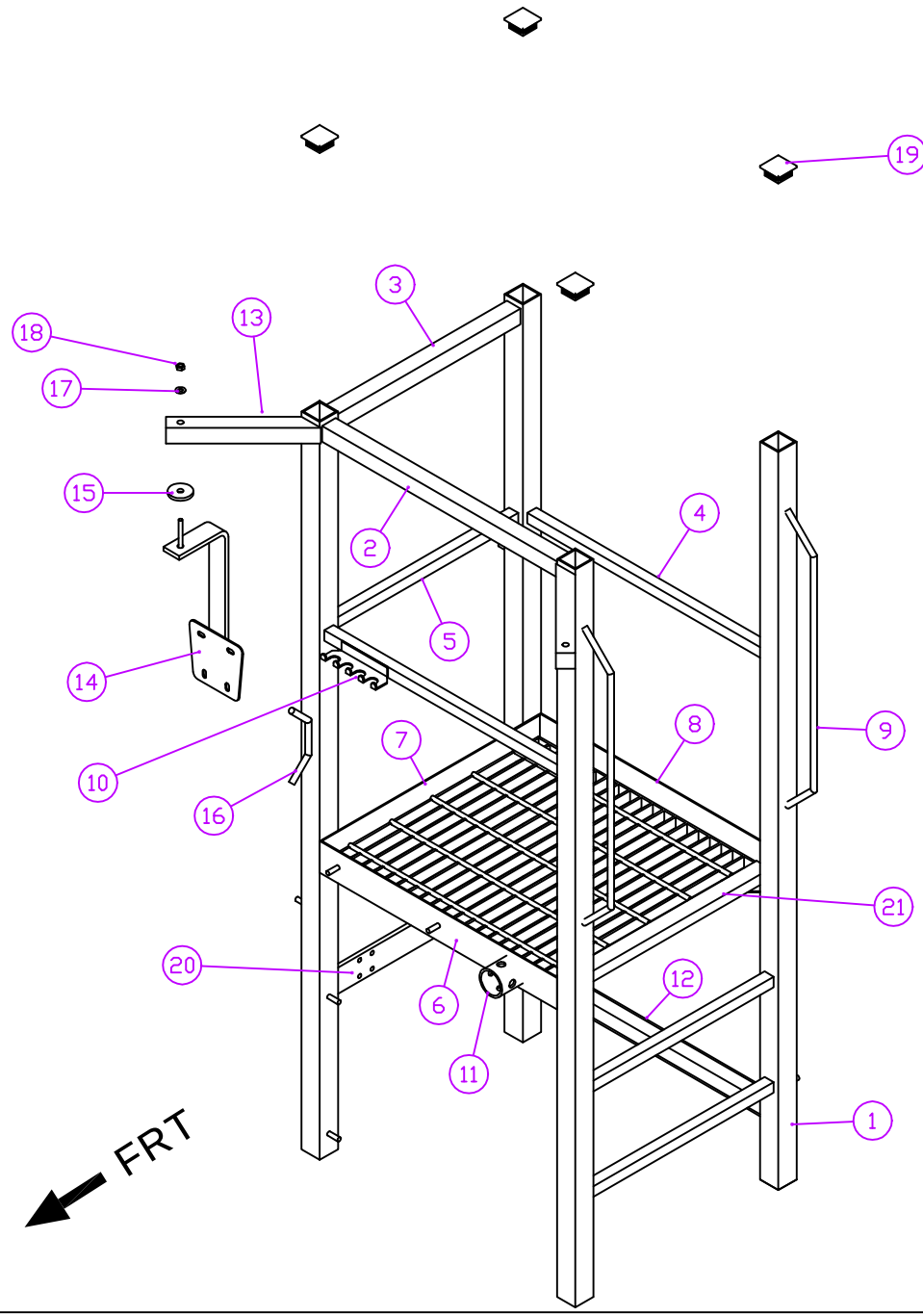

NO.	PART DESC.	QTY	PART NO.
21	PLATFORM GRATING - GALVANIZED	1	030-00-11
20	RESERVOIR MOUNT	1	039-00-02
19	PLASTIC END CAPS	4	150-00-04
18	Ø1/2" LOCKNUT	1	140-00-89
17	Ø1/2" FLATWASHER	1	140-00-67
16	WIRE/ROPE TIE	1	030-00-34
15	URETHANE WASHER	1	030-00-25
14	SCALE INDICATOR MOUNT BRACKET	1	030-00-24
13	SCALE INDICATOR MOUNTING TUBE	2	030-00-23
12	DRIVESHAFT SHIELD MOUNT ANGLE	1	030-00-20
11	IMPLEMENT JACK INNER SLEEVE	1	030-00-19
10	HOSE HOLDER (4-SLOT)	1	030-00-14
9	STAND LADDER HANDLES	2	030-00-12
8	PLATFORM SUPPORT ANGLE - REAR	1	030-00-10
7	PLATFORM SUPPORT ANGLE - SIDE	1	030-00-09
6	PLATFORM SUPPORT ANGLE - FRONT	1	030-00-08
5	SIDE STAND TUBES	3	030-00-07
4	FRONT AND REAR STAND TUBES	2	030-00-06
3	TOP SIDE STAND TUBE	1	030-00-05
2	TOP FRONT STAND TUBE	1	030-00-04
1	STAND LEGS	4	030-00-01

PARTS LIST

DRAWN BY: D. RODGERS

DATE: DEC 18/00

MODEL: 2725

SHEET: 1 of 1

PART/ASSEMBLY NO: 039-05-02

TITLE: BASE STAND FRAME ASSEMBLY FOR MODEL 2725

JAY•LOR Fabricating Inc

JAY•LOR®

Cutter • Mixer • Feeder

04 - WHEELS

JAY-LOR® Fabricating Inc.
RR # 2 Orton, Ontario, Canada, L0N 1N0 Tel: (519) 787-9353 Fax: (519) 787-7053

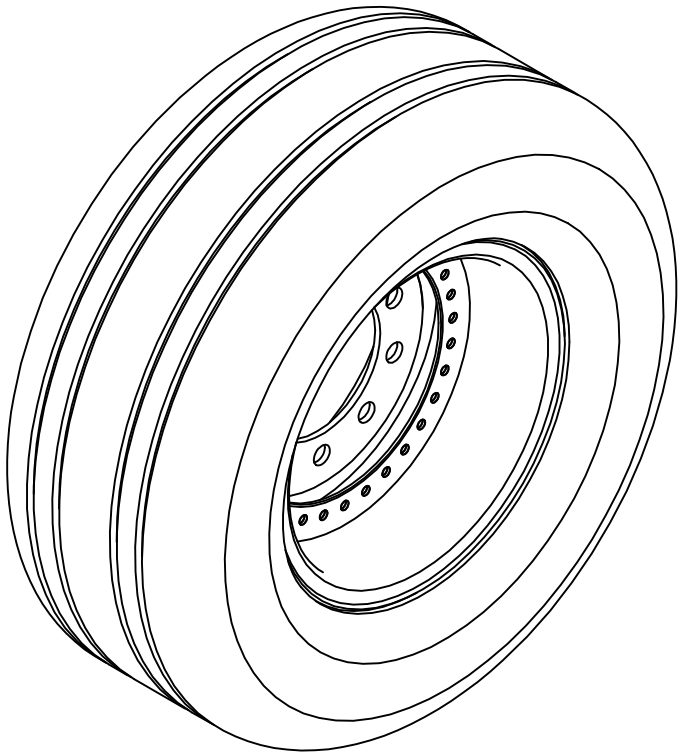

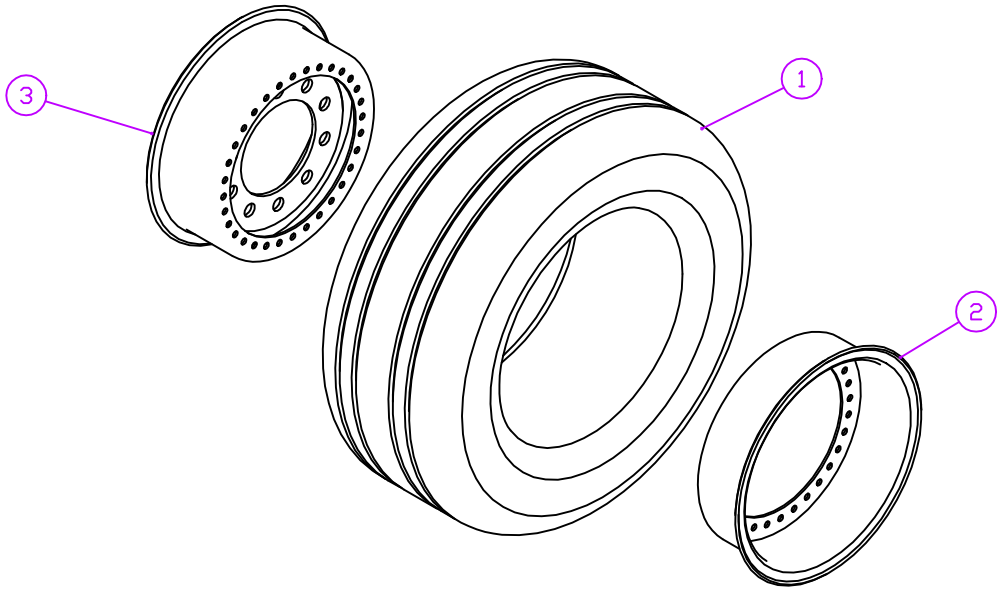

NO.	PART DESC.	QTY	PART NO.
5	16,000lb - RUBBER RIM LINER	1	040-03-05
4	16,000lb - TUBE	1	040-03-04
3	16,000lb - INNER RIM	1	040-03-03
2	16,000lb - OUTER RIM	1	040-03-02
1	16,000lb - AIRCRAFT TIRE	1	040-03-01

PARTS LIST

DRAWN BY: D. RODGERS

DATE: DEC 18/00

MODEL: 2725

SHEET: 1 of 1

PART/ASSEMBLY NO: 040-03-00

TITLE: 16,000lb AIRCRAFT WHEEL ASSEMBLY - H40X14.5-19

JAY•LOR Fabricating Inc

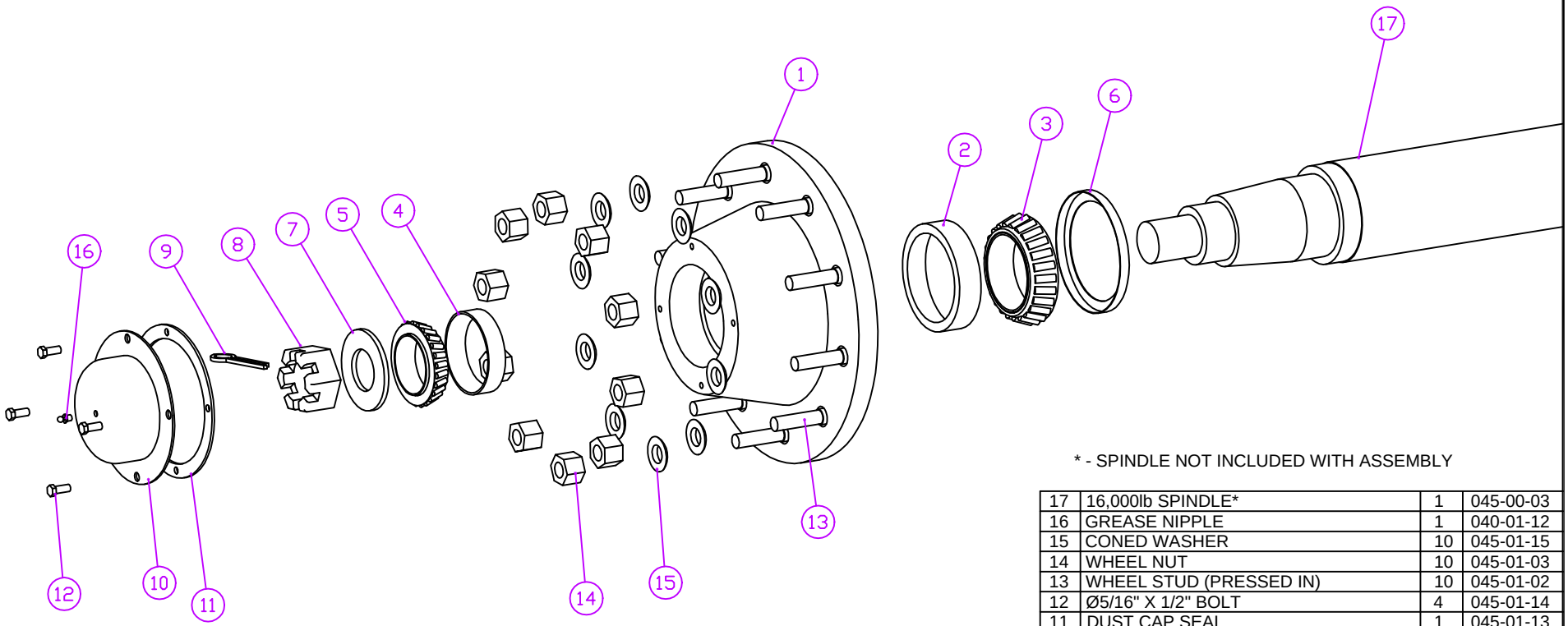

* - SPINDLE NOT INCLUDED WITH ASSEMBLY

NO.	PART DESC.	QTY	PART NO.
17	16,000lb SPINDLE*	1	045-00-03
16	GREASE NIPPLE	1	040-01-12
15	CONED WASHER	10	045-01-15
14	WHEEL NUT	10	045-01-03
13	WHEEL STUD (PRESSED IN)	10	045-01-02
12	Ø5/16" X 1/2" BOLT	4	045-01-14
11	DUST CAP SEAL	1	045-01-13
10	DUST CAP	1	045-01-12
9	COTTER PIN	1	045-01-11
8	AXLE NUT	1	045-01-10
7	WASHER	1	045-01-09
6	GREASE SEAL	1	045-01-04
5	OUTER BEARING	1	045-01-08
4	OUTER BEARING RACE	1	045-01-07
3	INNER BEARING	1	045-01-06
2	INNER BEARING RACE	1	045-01-05
1	16,000lb 10BH CASTING	1	045-01-01

PARTS LIST

DRAWN BY: D. RODGERS | DATE: DEC 18/00

MODEL: 2725 | SHEET: 1 of 2

PART/ASSEMBLY NO: 045-01-00

TITLE: 16,000lb, 10 BOLT HUB COMPLETE ASSEMBLY AND COMPONENTS (W/O SPINDLE)

JAY•LOR Fabricating Inc

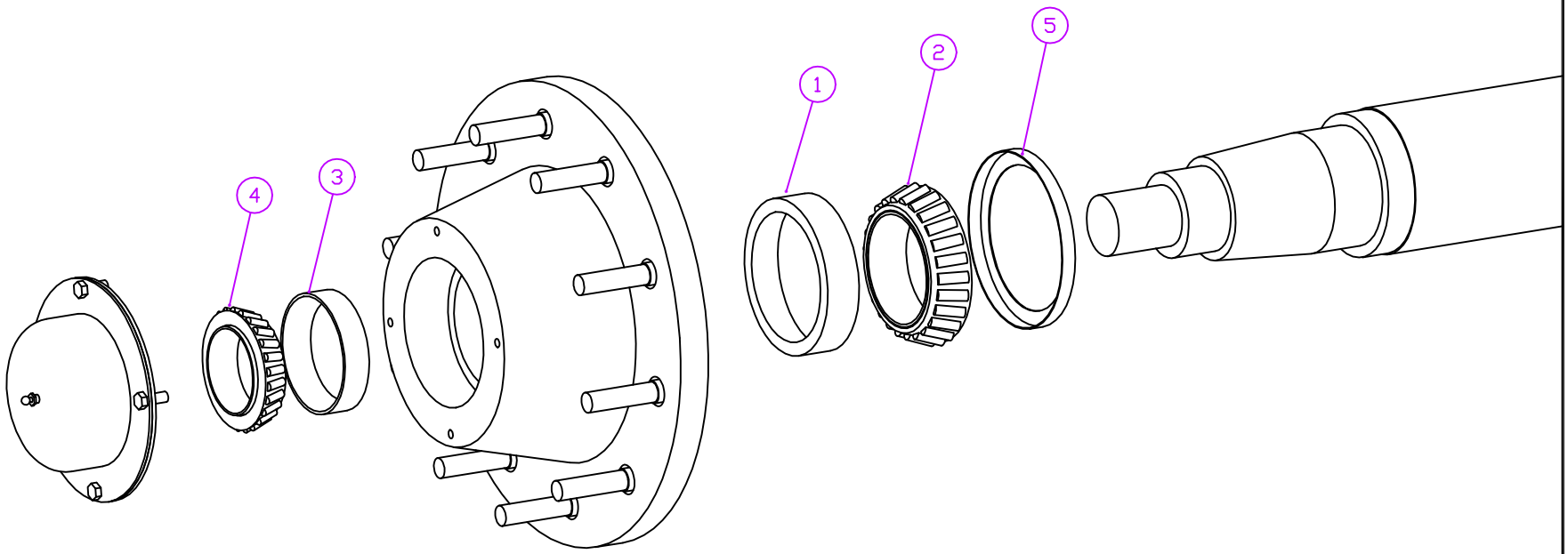

NO.	PART DESC.	QTY	PART NO.
5	GREASE SEAL	1	045-01-04
4	OUTER BEARING	1	045-01-08
3	OUTER BEARING RACE	1	045-01-07
2	INNER BEARING	1	045-01-06
1	INNER BEARING RACE	1	045-01-05

PARTS LIST

DRAWN BY: D. RODGERS

DATE: DEC 18/00

MODEL: 2725

SHEET: 2 of 2

PART/ASSEMBLY NO: 045-01-50

TITLE: 16,000lb, 10 BOLT HUB - BEARING AND SEAL KIT

JAY•LOR® Fabricating Inc

JAY•LOR®

Cutter • Mixer • Feeder

05 - AUGER

"Putting the 'Total' into TMR"

JAY-LOR® Fabricating Inc.
RR # 2 Orton, Ontario, Canada, L0N 1N0 Tel: (519) 787-9353 Fax: (519) 787-7053

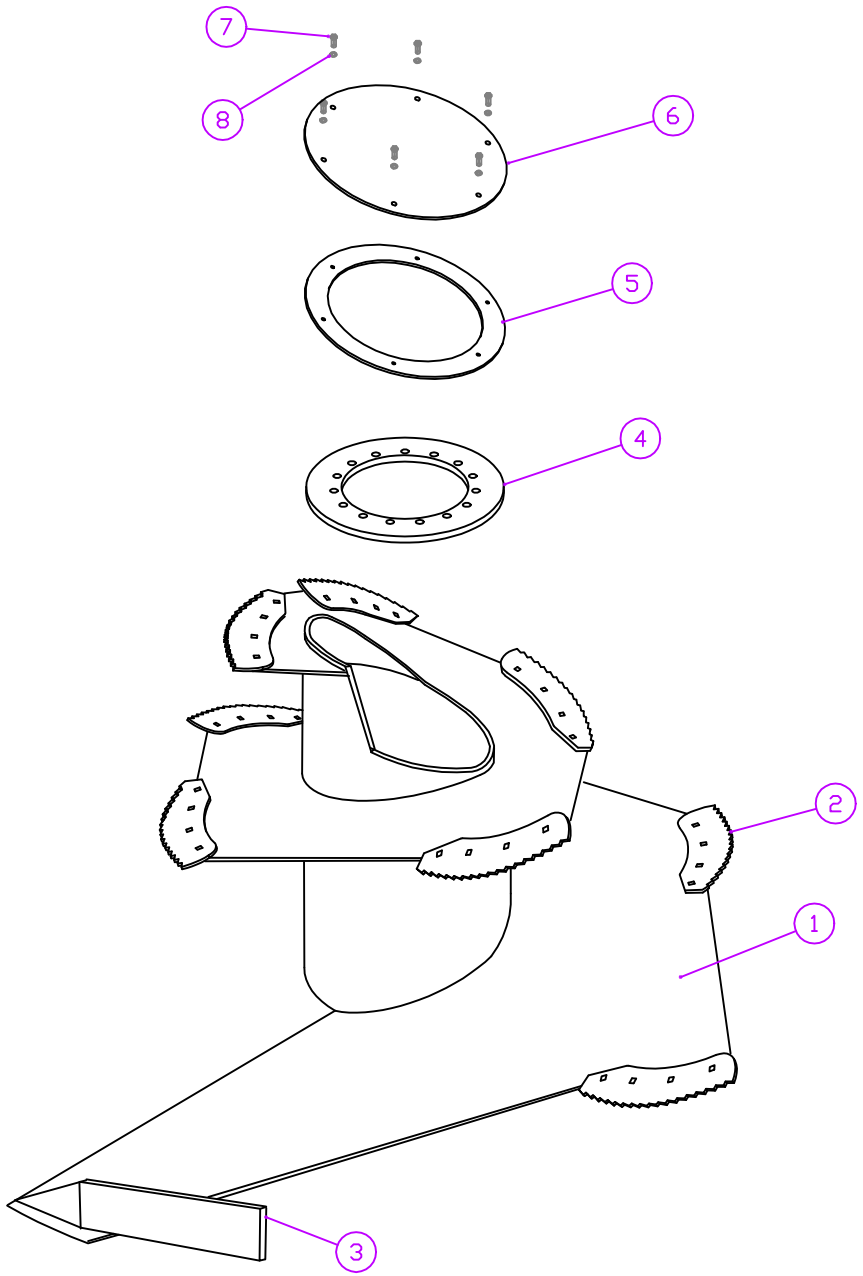

SPECIAL NOTE:

- MODEL 2725 UTILIZES IDENTICAL MIXING AND CUTTING COMPONENTS AS MODELS 2300/2350, BUT IN DUPLICATE QUANTITIES (I.E. TWIN AUGER MACHINE).

NO.	PART DESC.	QTY	PART NO.
8	Ø3/8" LOCKWASHERS	12	140-00-71
7	Ø3/8" X 1" BOLTS	12	140-00-12
6	AUGER CAP	2	057-00-03
5	SUPPORT RING FOR AUGER CAP	2	057-00-04
4	FASTENING RING	2	050-00-21
3	ANGLING BLADE ASSEMBLY	2	059-07-03
2	KNIFE KIT - 8-PIECE W/ HARDWARE	2	059-06-03
1	BASE MODEL 2300/2350 AUGER	2	053-00-01

PARTS LIST

DRAWN BY: D. RODGERS
DATE: DEC 18/00
MODEL: 2725
SHEET: 1 of 1
PART/ASSEMBLY NO: 059-05-03

JAY•LOR Fabricating Inc

TITLE: COMPLETE AUGER ASSEMBLY FOR MODEL 2725 - 2000 SERIES 'A' (SLOPED TOP), QUANTITY: (2)

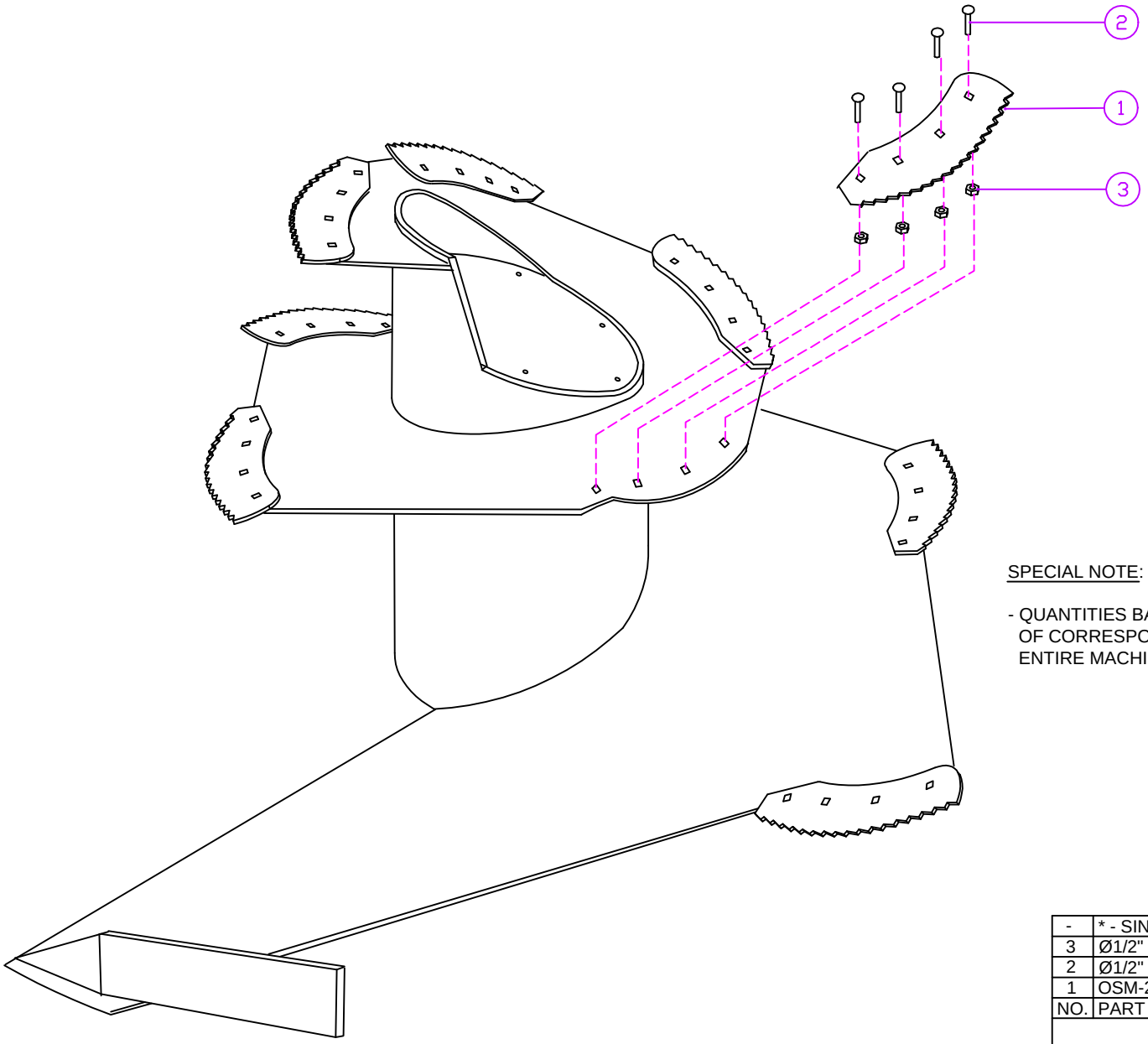

SPECIAL NOTE:

- QUANTITIES BASED PER AUGER, DUPLICATE QUANTITIES OF CORRESPONDING ASSEMBLIES REQUIRED TO OUTFIT ENTIRE MACHINE (I.E. TWIN AUGER MACHINE).

NO.	PART DESC.	QTY	PART NO.
-	* - SINGLE KNIFE ASSEMBLY USE P/N	-	050-06-02
3	Ø1/2" NUTS	32	050-00-12
2	Ø1/2" X 1-1/2" CARRIAGE BOLTS	32	050-00-11
1	OSM-22X JAY-LOR CUTTER BLADE 1/4"	8	050-00-13

PARTS LIST

DRAWN BY: D. RODGERS	DATE: DEC 18/00
MODEL: 2725	SHEET: 1 of 1
PART/ASSEMBLY NO: 059-06-03	

JAY•LOR Fabricating Inc

TITLE: KNIFE KIT ASSEMBLY FOR MODEL 2725 AUGER - 2000 SERIES 'A' (SLOPE TOP), 8 PIECES

SPECIAL NOTE:

- QUANTITIES BASED PER AUGER, DUPLICATE QUANTITIES OF CORRESPONDING ASSEMBLIES REQUIRED TO OUTFIT ENTIRE MACHINE (I.E. TWIN AUGER MACHINE)

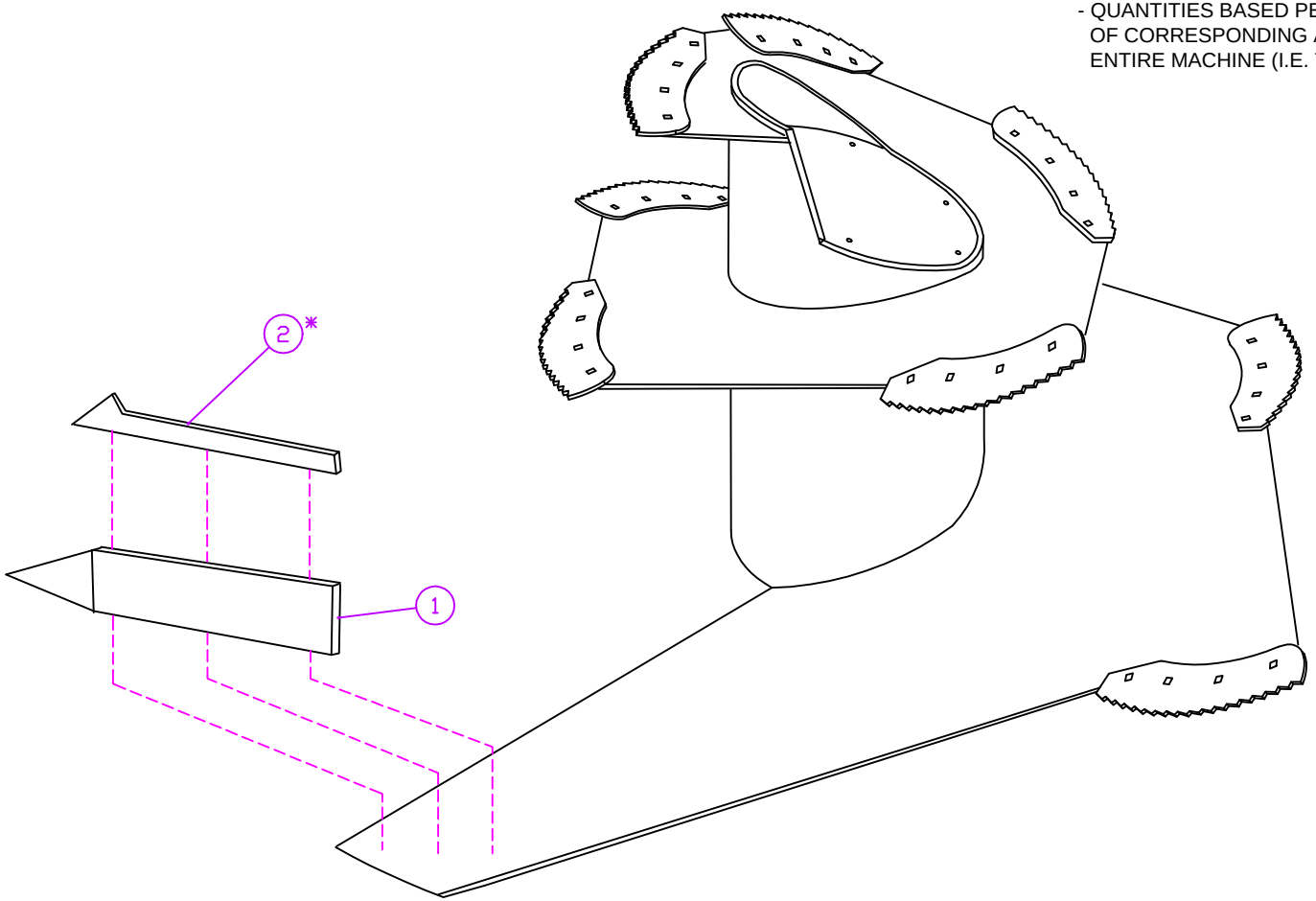

* - SPECIAL USE ONLY

NO.	PART DESC.	QTY	PART NO.
2	ANGLING BLADE EXTENSION*	1	050-00-22
1	ANGLING BLADE	1	050-00-07

PARTS LIST

DRAWN BY: D. RODGERS	DATE: DEC 18/00
MODEL: 2725	SHEET: 1 of 1
PART/ASSEMBLY NO: 059-07-03	

TITLE: ANGLING BLADE ASSEMBLY FOR MODEL 2725 - 2000 SERIES 'A' (SLOPED TOP)

JAY•LOR Fabricating Inc

JAY•LOR®

Cutter • Mixer • Feeder

06 - CONVEYOR

"Putting the 'Total' into TMR"

JAY-LOR® Fabricating Inc.
RR # 2 Orton, Ontario, Canada, L0N 1N0 Tel: (519) 787-9353 Fax: (519) 787-7053

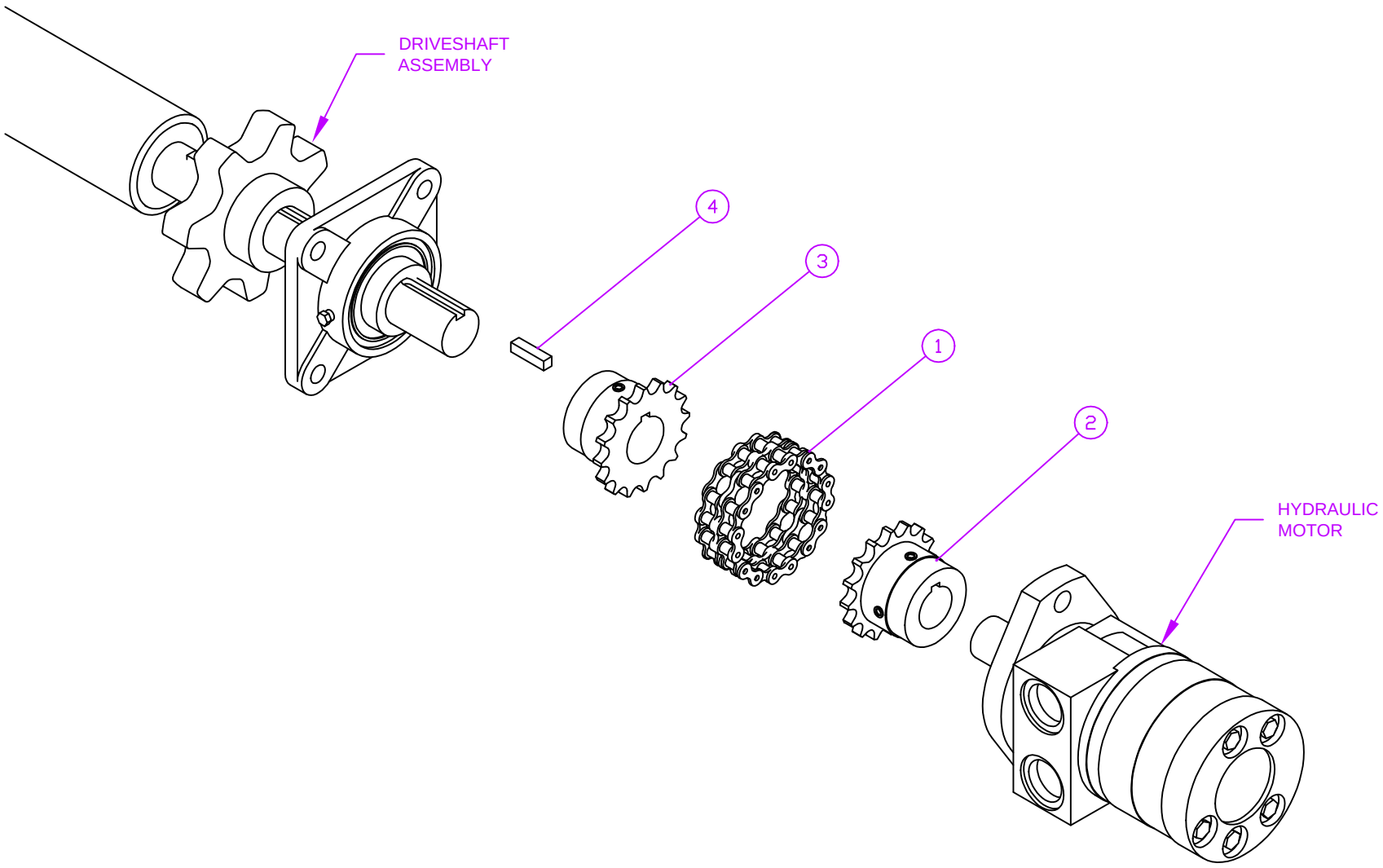

NO.	PART DESC.	QTY	PART NO.
4	KEY	1	060-03-06
3	Ø1-1/8", 16-TOOTH SPROCKET	1	060-03-05
2	Ø1", 16-TOOTH SPROCKET	1	060-03-03
1	CONNECTING CHAIN (#40)	1	060-03-02

PARTS LIST

DRAWN BY: D. RODGERS
DATE: MAY 23/00
MODEL: ALL APPLICABLE
SHEET: 1 of 1
PART/ASSEMBLY NO: 060-03-00

TITLE: CONVEYOR CHAIN COUPLER DRIVE ASSEMBLY

JAY•LOR Fabricating Inc

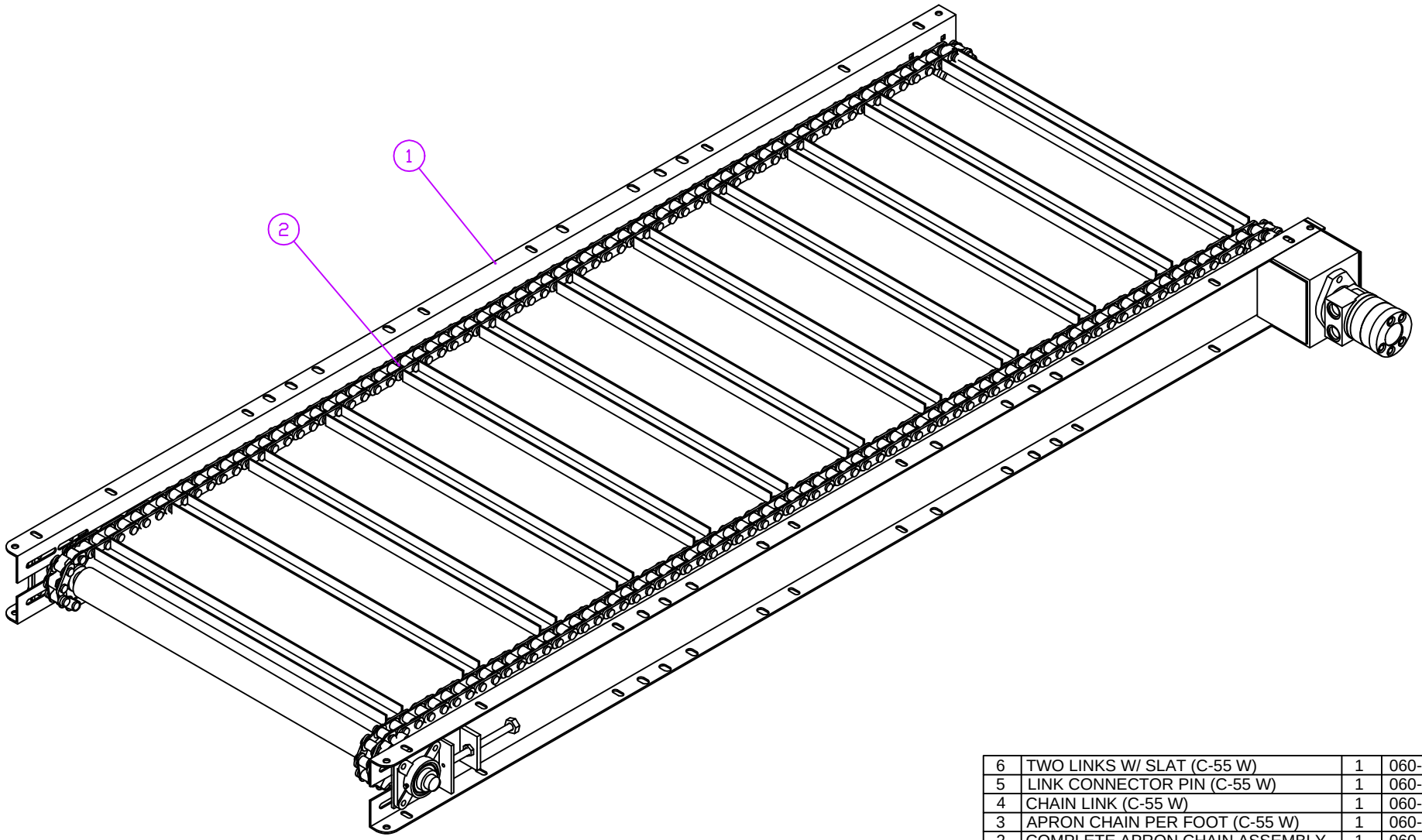

NO.	PART DESC.	QTY	PART NO.
6	TWO LINKS W/ SLAT (C-55 W)	1	060-01-04
5	LINK CONNECTOR PIN (C-55 W)	1	060-01-03
4	CHAIN LINK (C-55 W)	1	060-01-01
3	APRON CHAIN PER FOOT (C-55 W)	1	060-01-00
2	COMPLETE APRON CHAIN ASSEMBLY	1	060-04-05
1	8' (96") DUAL CONVEYOR W/O CHAIN	1	060-04-02

PARTS LIST

DRAWN BY: D. RODGERS
DATE: APR 28/00
MODEL: ALL APPLICABLE
SHEET: 1 of 1
PART/ASSEMBLY NO: 060-04-01

JAY•LOR Fabricating Inc

TITLE: 8' (96") DUAL DISCHARGE CONVEYOR ASSEMBLY - COMPLETE W/O SHIELDS AND HOSES

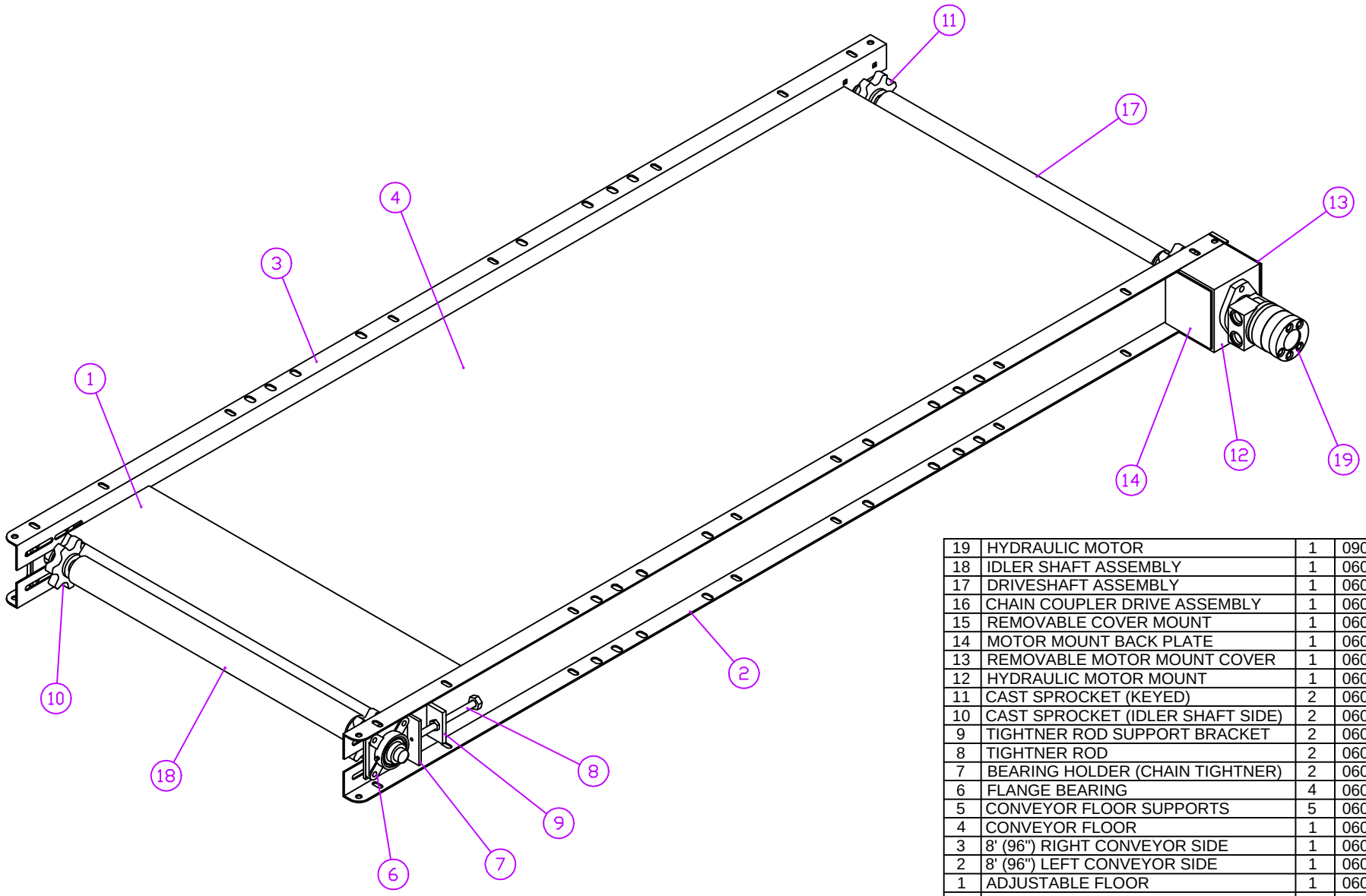

NO.	PART DESC.	QTY	PART NO.
19	HYDRAULIC MOTOR	1	090-00-26
18	IDLER SHAFT ASSEMBLY	1	060-04-09
17	DRIVESHAFT ASSEMBLY	1	060-04-08
16	CHAIN COUPLER DRIVE ASSEMBLY	1	060-03-00
15	REMOVABLE COVER MOUNT	1	060-00-40
14	MOTOR MOUNT BACK PLATE	1	060-00-33
13	REMOVABLE MOTOR MOUNT COVER	1	060-00-32
12	HYDRAULIC MOTOR MOUNT	1	060-00-31
11	CAST SPROCKET (KEYED)	2	060-00-30
10	CAST SPROCKET (IDLER SHAFT SIDE)	2	060-00-27
9	TIGHTNER ROD SUPPORT BRACKET	2	060-00-23
8	TIGHTNER ROD	2	060-00-22
7	BEARING HOLDER (CHAIN TIGHTNER)	2	060-00-21
6	FLANGE BEARING	4	060-00-20
5	CONVEYOR FLOOR SUPPORTS	5	060-00-18
4	CONVEYOR FLOOR	1	060-00-14
3	8' (96") RIGHT CONVEYOR SIDE	1	060-00-13
2	8' (96") LEFT CONVEYOR SIDE	1	060-00-12
1	ADJUSTABLE FLOOR	1	060-00-01

PARTS LIST

DRAWN BY: D. RODGERS
DATE: MAY 23/00
MODEL: ALL APPLICABLE
SHEET: 1 of 3
PART/ASSEMBLY NO: 060-04-02

TITLE: 8' (96") DUAL DISCHARGE CONVEYOR ASSEMBLY: COMPLETE W/O APRON CHAIN, SHIELDS, AND HOSES

JAY•LOR Fabricating Inc

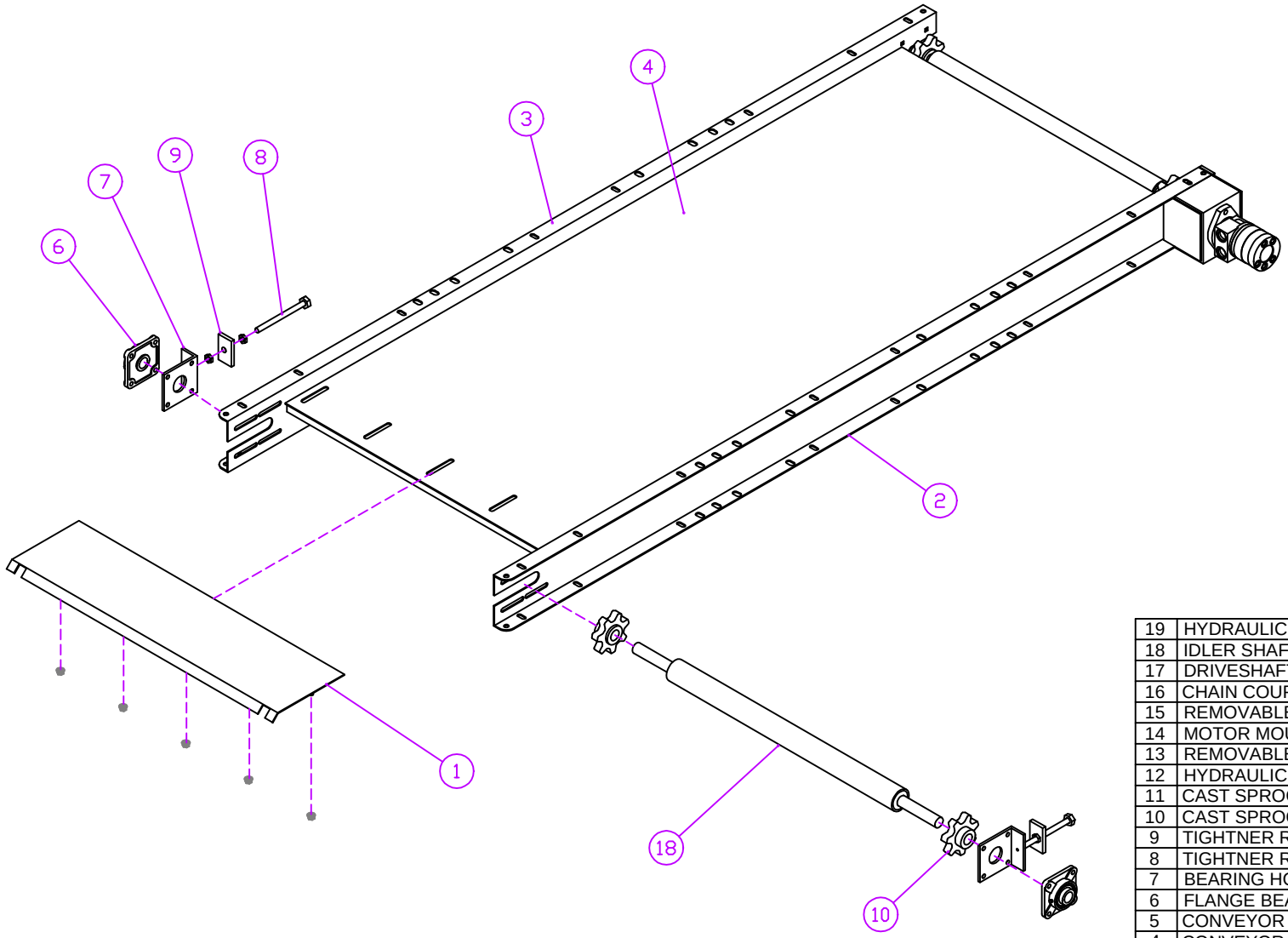

NO.	PART DESC.	QTY	PART NO.
19	HYDRAULIC MOTOR	1	090-00-26
18	IDLER SHAFT ASSEMBLY	1	060-04-09
17	DRIVESHAFT ASSEMBLY	1	060-04-08
16	CHAIN COUPLER DRIVE ASSEMBLY	1	060-03-00
15	REMOVABLE COVER MOUNT	1	060-00-40
14	MOTOR MOUNT BACK PLATE	1	060-00-33
13	REMOVABLE MOTOR MOUNT COVER	1	060-00-32
12	HYDRAULIC MOTOR MOUNT	1	060-00-31
11	CAST SPROCKET (KEYED)	2	060-00-30
10	CAST SPROCKET (IDLER SHAFT SIDE)	2	060-00-27
9	TIGHTNER ROD SUPPORT BRACKET	2	060-00-23
8	TIGHTNER ROD	2	060-00-22
7	BEARING HOLDER (CHAIN TIGHTNER)	2	060-00-21
6	FLANGE BEARING	4	060-00-20
5	CONVEYOR FLOOR SUPPORTS	5	060-00-18
4	CONVEYOR FLOOR	1	060-00-14
3	8' (96") RIGHT CONVEYOR SIDE	1	060-00-13
2	8' (96") LEFT CONVEYOR SIDE	1	060-00-12
1	ADJUSTABLE FLOOR	1	060-00-01

PARTS LIST

DRAWN BY: D. RODGERS

DATE: MAY 23/00

MODEL: ALL APPLICABLE

SHEET: 2 of 3

PART/ASSEMBLY NO: 060-04-02

TITLE: 8' (96") DUAL DISCHARGE CONVEYOR ASSEMBLY: COMPLETE W/O APRON CHAIN, SHIELDS, AND HOSES

JAY•LOR Fabricating Inc

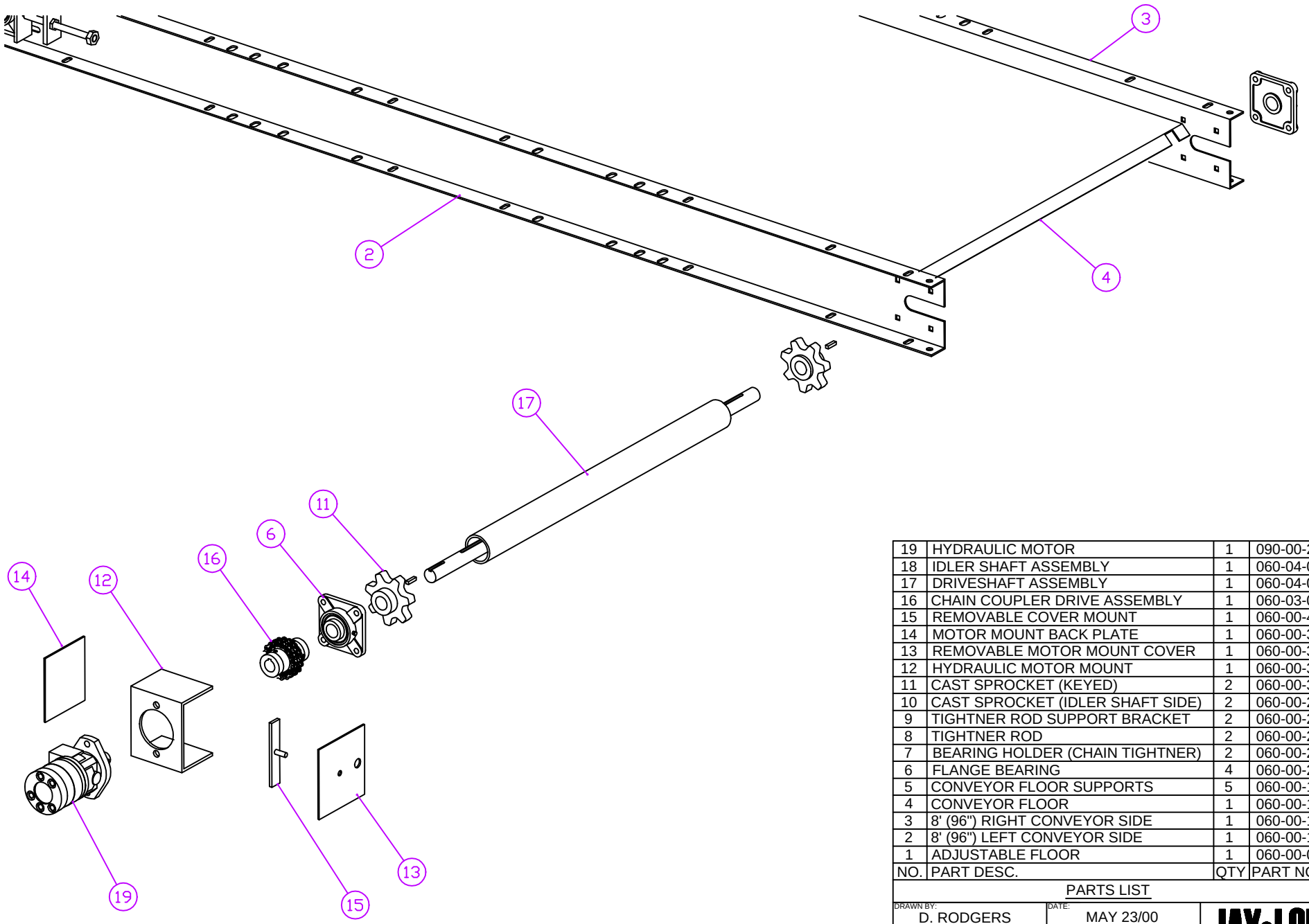

NO.	PART DESC.	QTY	PART NO.
19	HYDRAULIC MOTOR	1	090-00-26
18	IDLER SHAFT ASSEMBLY	1	060-04-09
17	DRIVESHAFT ASSEMBLY	1	060-04-08
16	CHAIN COUPLER DRIVE ASSEMBLY	1	060-03-00
15	REMOVABLE COVER MOUNT	1	060-00-40
14	MOTOR MOUNT BACK PLATE	1	060-00-33
13	REMOVABLE MOTOR MOUNT COVER	1	060-00-32
12	HYDRAULIC MOTOR MOUNT	1	060-00-31
11	CAST SPROCKET (KEYED)	2	060-00-30
10	CAST SPROCKET (IDLER SHAFT SIDE)	2	060-00-27
9	TIGHTNER ROD SUPPORT BRACKET	2	060-00-23
8	TIGHTNER ROD	2	060-00-22
7	BEARING HOLDER (CHAIN TIGHTNER)	2	060-00-21
6	FLANGE BEARING	4	060-00-20
5	CONVEYOR FLOOR SUPPORTS	5	060-00-18
4	CONVEYOR FLOOR	1	060-00-14
3	8' (96") RIGHT CONVEYOR SIDE	1	060-00-13
2	8' (96") LEFT CONVEYOR SIDE	1	060-00-12
1	ADJUSTABLE FLOOR	1	060-00-01

PARTS LIST

DRAWN BY: D. RODGERS

DATE: MAY 23/00

MODEL: ALL APPLICABLE

SHEET: 3 of 3

PART/ASSEMBLY NO: 060-04-02

TITLE: 8' (96") DUAL DISCHARGE CONVEYOR ASSEMBLY: COMPLETE W/O APRON CHAIN, SHIELDS, AND HOSES

JAY•LOR Fabricating Inc

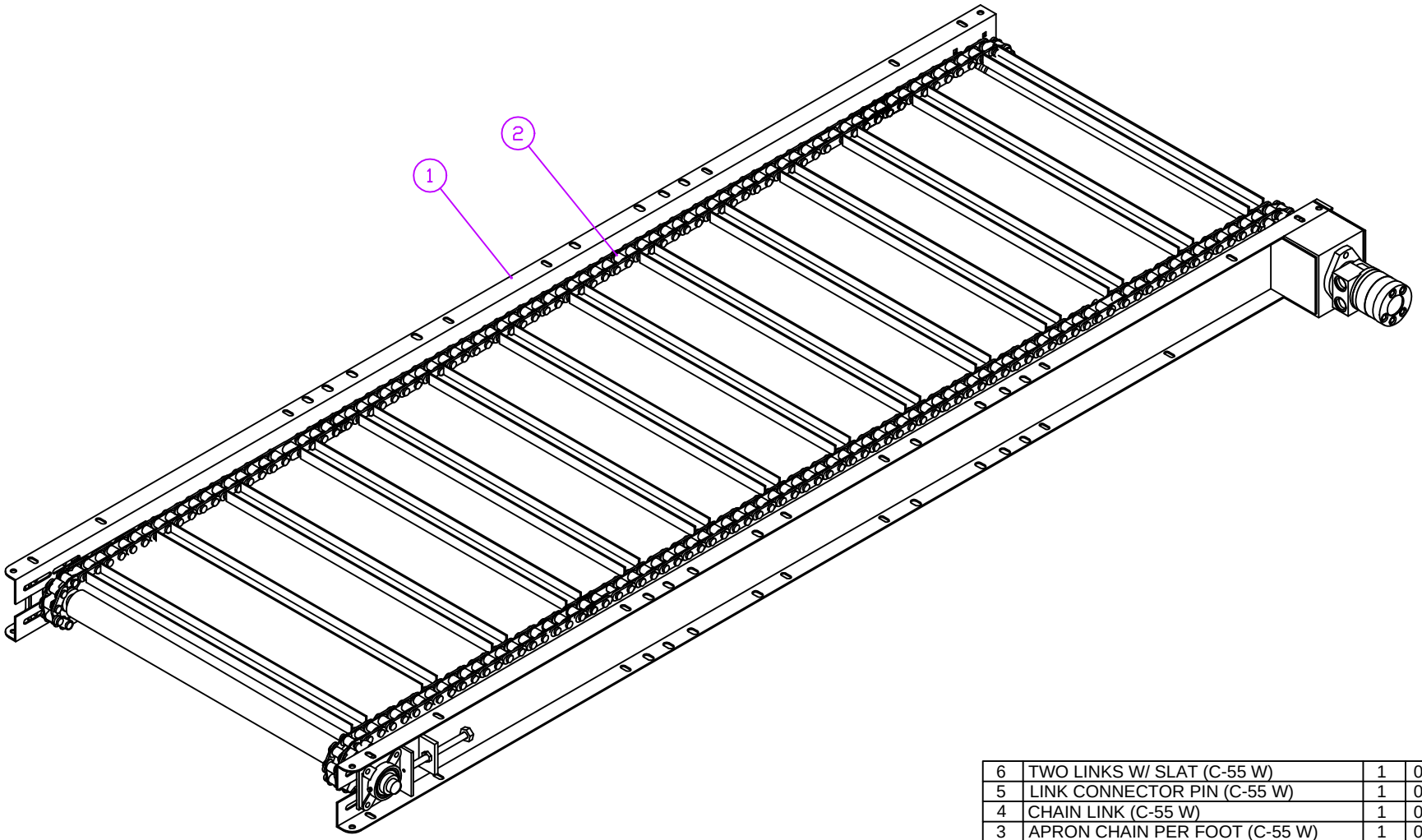

NO.	PART DESC.	QTY	PART NO.
6	TWO LINKS W/ SLAT (C-55 W)	1	060-01-04
5	LINK CONNECTOR PIN (C-55 W)	1	060-01-03
4	CHAIN LINK (C-55 W)	1	060-01-01
3	APRON CHAIN PER FOOT (C-55 W)	1	060-01-00
2	COMPLETE APRON CHAIN ASSEMBLY	1	060-05-05
1	9'-2" DUAL CONVEYOR W/O CHAIN	1	060-05-02

PARTS LIST

DRAWN BY: D. RODGERS
DATE: MAY 25/00
MODEL: ALL APPLICABLE
SHEET: 1 of 1
PART/ASSEMBLY NO: 060-05-01

JAY•LOR Fabricating Inc

TITLE: 9'-2" (110") DUAL DISCHARGE CONVEYOR ASSEMBLY - COMPLETE W/O SHIELDS AND HOSES

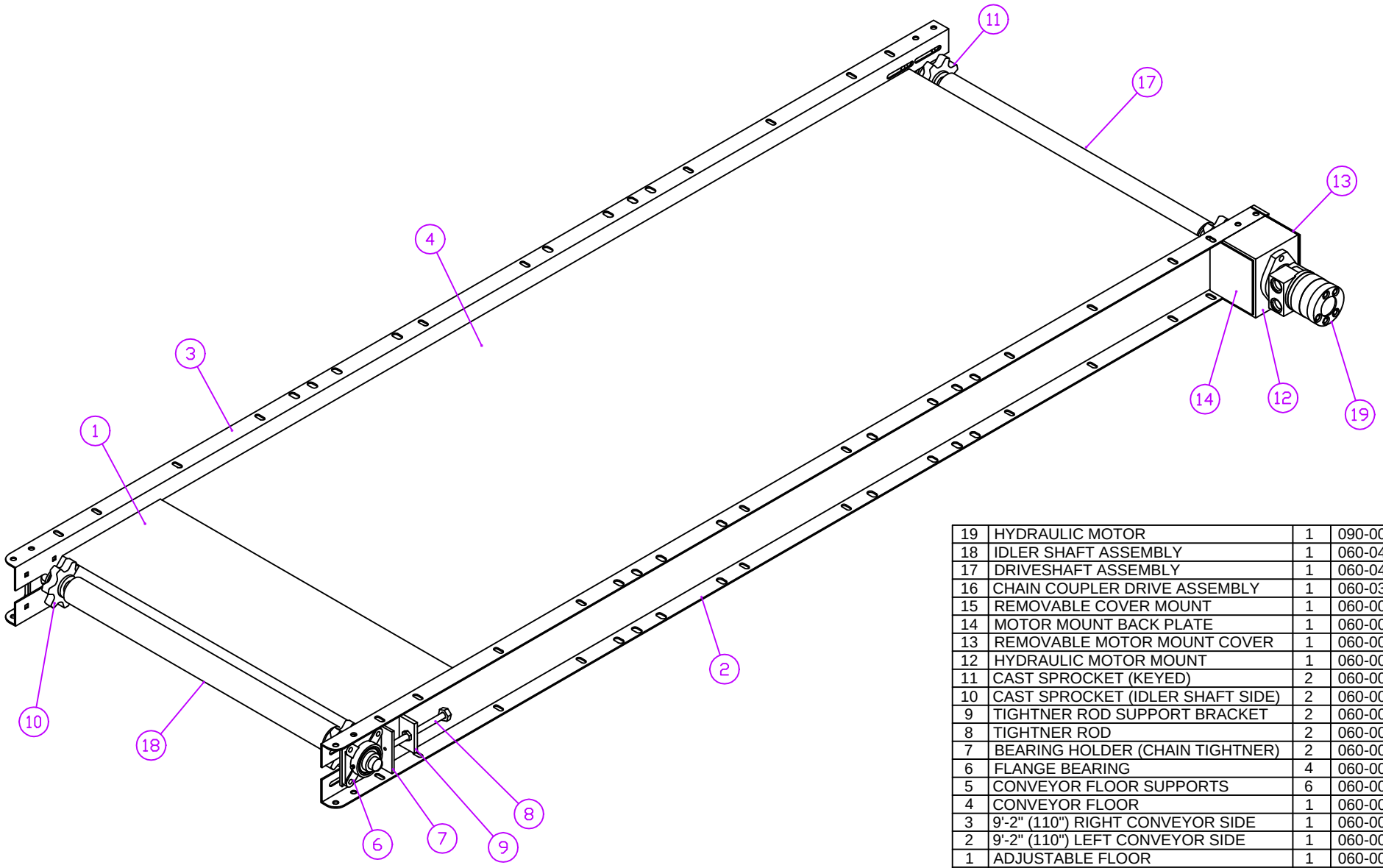

NO.	PART DESC.	QTY	PART NO.
19	HYDRAULIC MOTOR	1	090-00-26
18	IDLER SHAFT ASSEMBLY	1	060-04-09
17	DRIVESHAFT ASSEMBLY	1	060-04-08
16	CHAIN COUPLER DRIVE ASSEMBLY	1	060-03-00
15	REMOVABLE COVER MOUNT	1	060-00-40
14	MOTOR MOUNT BACK PLATE	1	060-00-33
13	REMOVABLE MOTOR MOUNT COVER	1	060-00-32
12	HYDRAULIC MOTOR MOUNT	1	060-00-31
11	CAST SPROCKET (KEYED)	2	060-00-30
10	CAST SPROCKET (IDLER SHAFT SIDE)	2	060-00-27
9	TIGHTNER ROD SUPPORT BRACKET	2	060-00-23
8	TIGHTNER ROD	2	060-00-22
7	BEARING HOLDER (CHAIN TIGHTNER)	2	060-00-21
6	FLANGE BEARING	4	060-00-20
5	CONVEYOR FLOOR SUPPORTS	6	060-00-18
4	CONVEYOR FLOOR	1	060-00-17
3	9'-2" (110") RIGHT CONVEYOR SIDE	1	060-00-16
2	9'-2" (110") LEFT CONVEYOR SIDE	1	060-00-15
1	ADJUSTABLE FLOOR	1	060-00-56

PARTS LIST

DRAWN BY: D. RODGERS

DATE: MAY 25/00

MODEL: ALL APPLICABLE

SHEET: 1 of 3

PART/ASSEMBLY NO: 060-05-02

TITLE: 9'-2" (110") DUAL DISCHARGE CONVEYOR ASSEMBLY: COMPLETE W/O APRON CHAIN, SHIELDS, AND HOSES

JAY•LOR Fabricating Inc

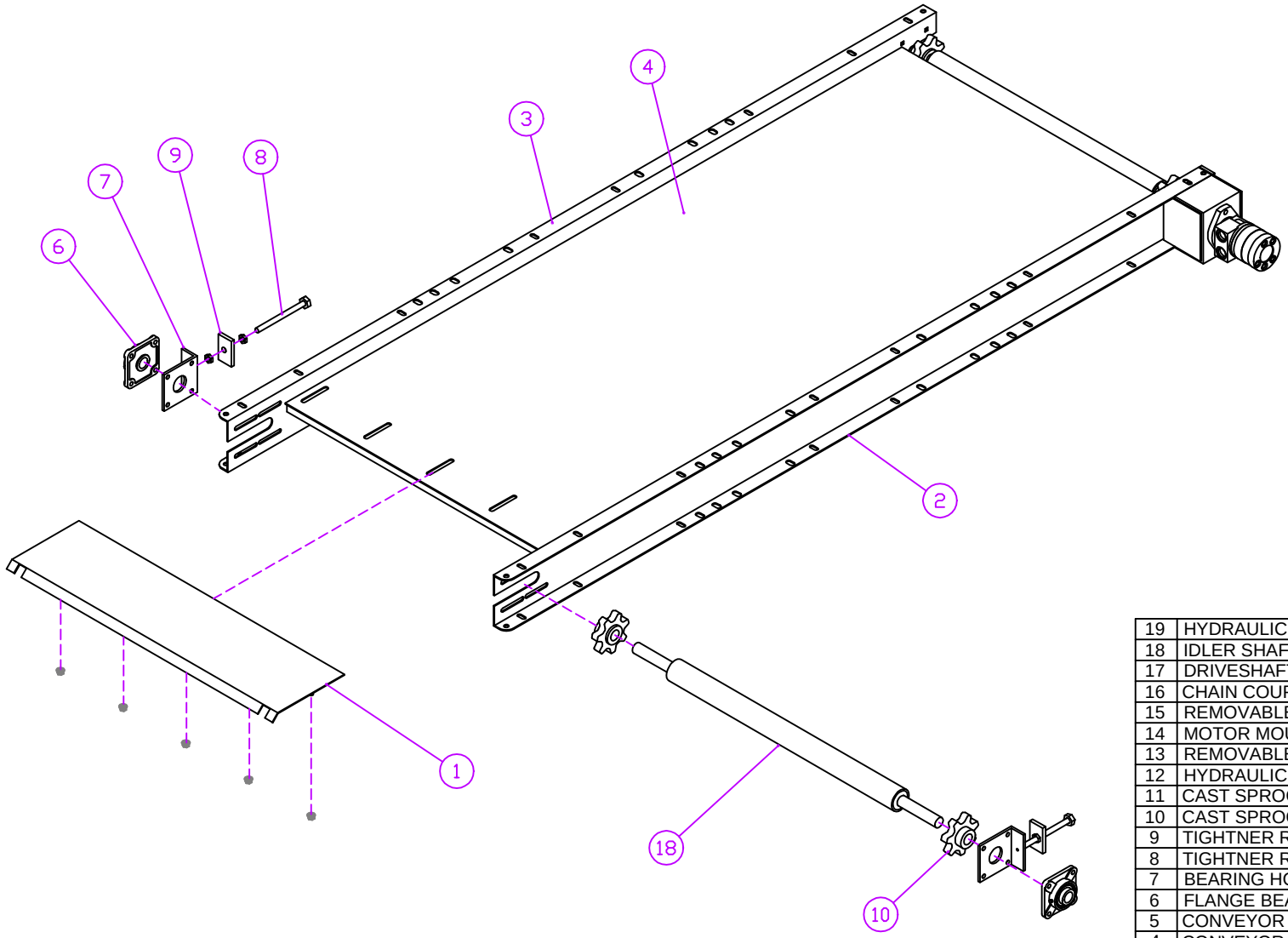

NO.	PART DESC.	QTY	PART NO.
19	HYDRAULIC MOTOR	1	090-00-26
18	IDLER SHAFT ASSEMBLY	1	060-04-09
17	DRIVESHAFT ASSEMBLY	1	060-04-08
16	CHAIN COUPLER DRIVE ASSEMBLY	1	060-03-00
15	REMOVABLE COVER MOUNT	1	060-00-40
14	MOTOR MOUNT BACK PLATE	1	060-00-33
13	REMOVABLE MOTOR MOUNT COVER	1	060-00-32
12	HYDRAULIC MOTOR MOUNT	1	060-00-31
11	CAST SPROCKET (KEYED)	2	060-00-30
10	CAST SPROCKET (IDLER SHAFT SIDE)	2	060-00-27
9	TIGHTNER ROD SUPPORT BRACKET	2	060-00-23
8	TIGHTNER ROD	2	060-00-22
7	BEARING HOLDER (CHAIN TIGHTNER)	2	060-00-21
6	FLANGE BEARING	4	060-00-20
5	CONVEYOR FLOOR SUPPORTS	6	060-00-18
4	CONVEYOR FLOOR	1	060-00-17
3	9'-2" (110") RIGHT CONVEYOR SIDE	1	060-00-16
2	9'-2" (110") LEFT CONVEYOR SIDE	1	060-00-15
1	ADJUSTABLE FLOOR	1	060-00-56

PARTS LIST

DRAWN BY: D. RODGERS

DATE: MAY 25/00

MODEL: ALL APPLICABLE

SHEET: 2 of 3

PART/ASSEMBLY NO: 060-05-02

TITLE: 9'-2" (110") DUAL DISCHARGE CONVEYOR ASSEMBLY: COMPLETE W/O APRON CHAIN, SHIELDS, AND HOSES

JAY•LOR Fabricating Inc

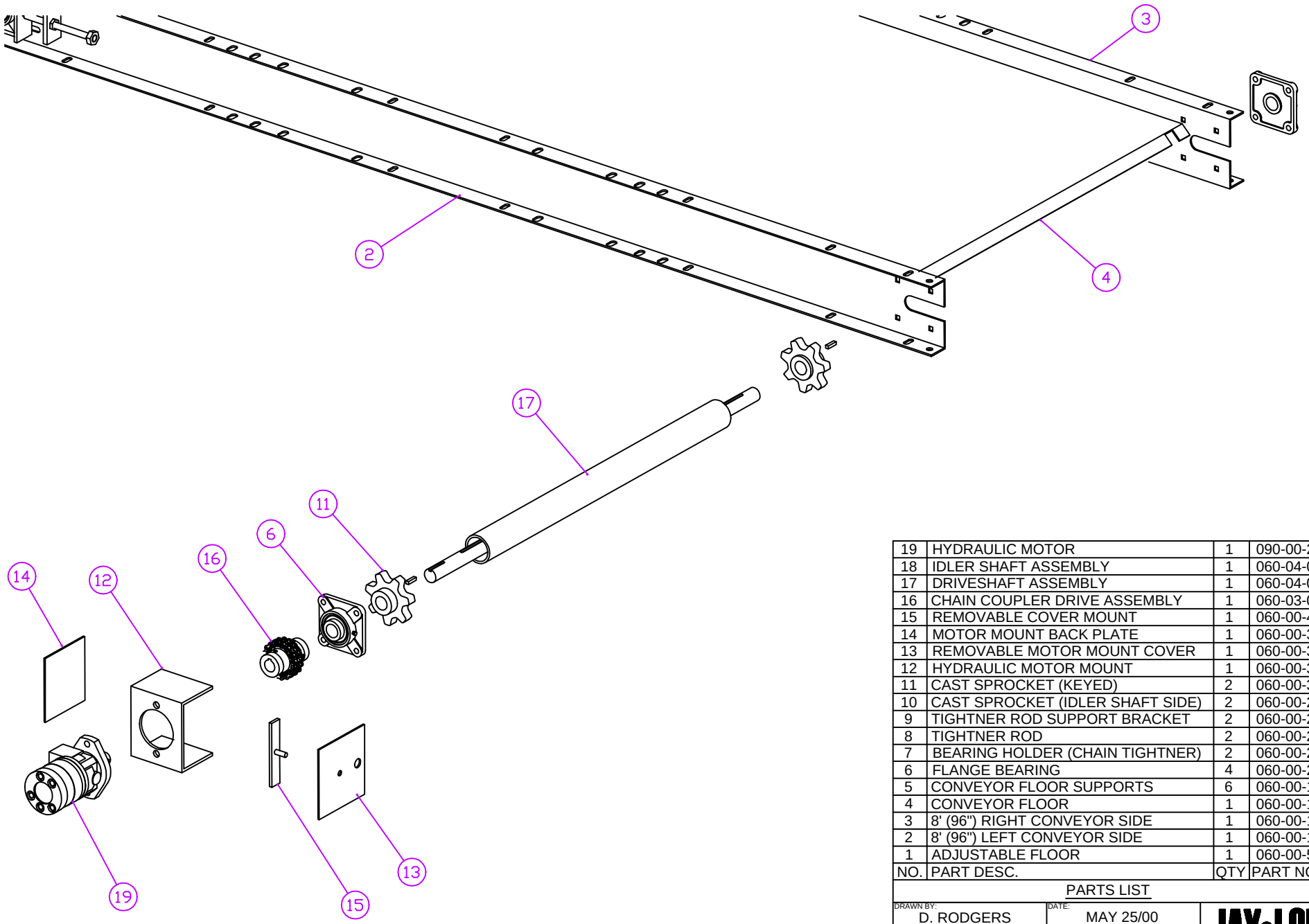

NO.	PART DESC.	QTY	PART NO.
19	HYDRAULIC MOTOR	1	090-00-26
18	IDLER SHAFT ASSEMBLY	1	060-04-09
17	DRIVESHAFT ASSEMBLY	1	060-04-08
16	CHAIN COUPLER DRIVE ASSEMBLY	1	060-03-00
15	REMOVABLE COVER MOUNT	1	060-00-40
14	MOTOR MOUNT BACK PLATE	1	060-00-33
13	REMOVABLE MOTOR MOUNT COVER	1	060-00-32
12	HYDRAULIC MOTOR MOUNT	1	060-00-31
11	CAST SPROCKET (KEYED)	2	060-00-30
10	CAST SPROCKET (IDLER SHAFT SIDE)	2	060-00-27
9	TIGHTNER ROD SUPPORT BRACKET	2	060-00-23
8	TIGHTNER ROD	2	060-00-22
7	BEARING HOLDER (CHAIN TIGHTNER)	2	060-00-21
6	FLANGE BEARING	4	060-00-20
5	CONVEYOR FLOOR SUPPORTS	6	060-00-18
4	CONVEYOR FLOOR	1	060-00-17
3	8' (96") RIGHT CONVEYOR SIDE	1	060-00-16
2	8' (96") LEFT CONVEYOR SIDE	1	060-00-15
1	ADJUSTABLE FLOOR	1	060-00-56

PARTS LIST

DRAWN BY: D. RODGERS | DATE: MAY 25/00

MODEL: ALL APPLICABLE | SHEET: 3 of 3

PART/ASSEMBLY NO: 060-05-02

JAY•LOR Fabricating Inc

TITLE: 9'-2" (110") DUAL DISCHARGE CONVEYOR ASSEMBLY: COMPLETE W/O APRON CHAIN, SHIELDS, AND HOSES

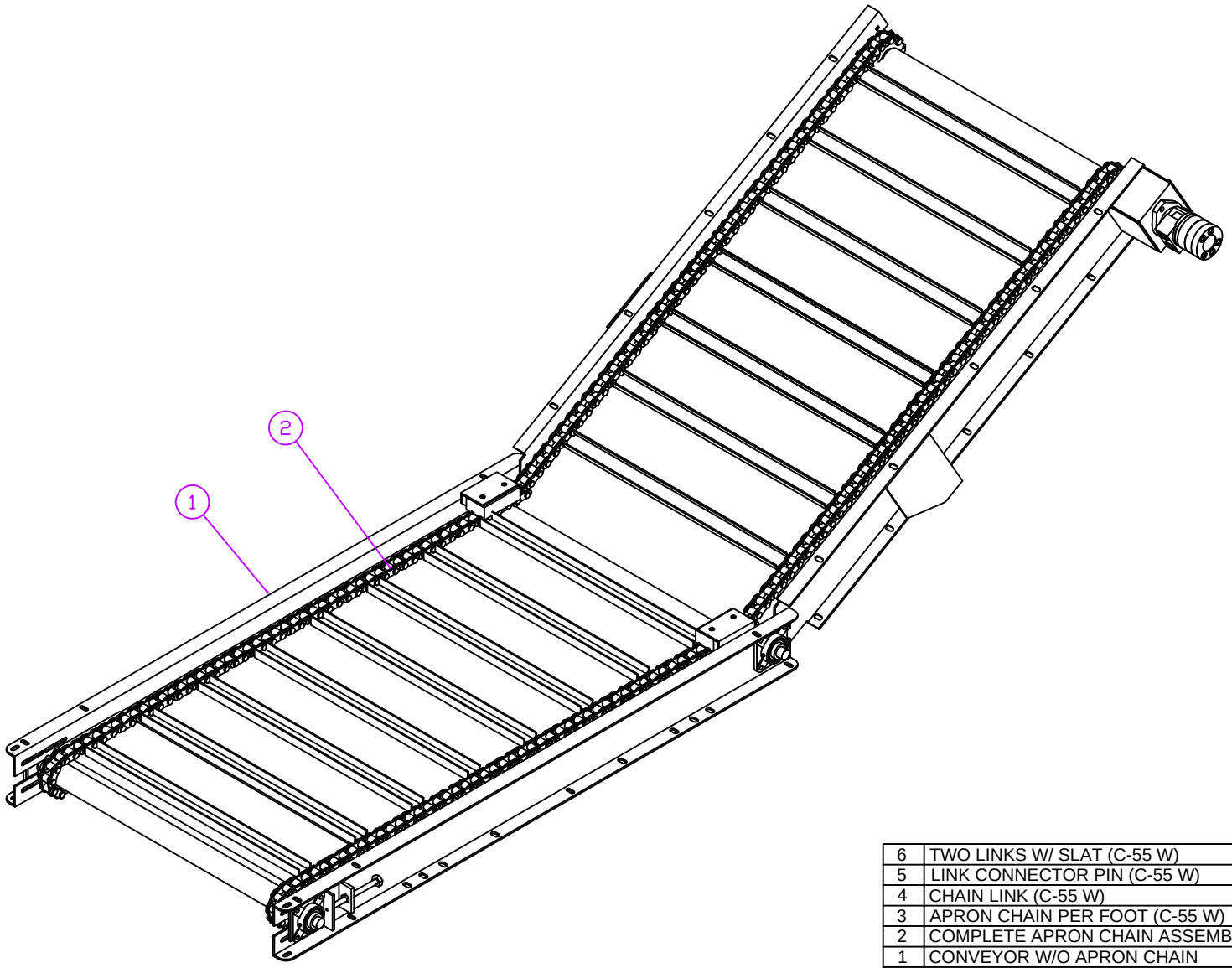

NO.	PART DESC.	QTY	PART NO.
6	TWO LINKS W/ SLAT (C-55 W)	1	060-01-04
5	LINK CONNECTOR PIN (C-55 W)	1	060-01-03
4	CHAIN LINK (C-55 W)	1	060-01-01
3	APRON CHAIN PER FOOT (C-55 W)	1	060-01-00
2	COMPLETE APRON CHAIN ASSEMBLY	1	060-07-05
1	CONVEYOR W/O APRON CHAIN	1	060-07-02

PARTS LIST

DRAWN BY: D. RODGERS

DATE: MAY 24/00

MODEL: ALL APPLICABLE

SHEET: 1 of 1

PART/ASSEMBLY NO: 060-07-01

JAY•LOR Fabricating Inc

TITLE: 6' CONVEYOR W/ 60" WING EXTENSION: COMPLETE W/O SHIELDS, AND HOSES

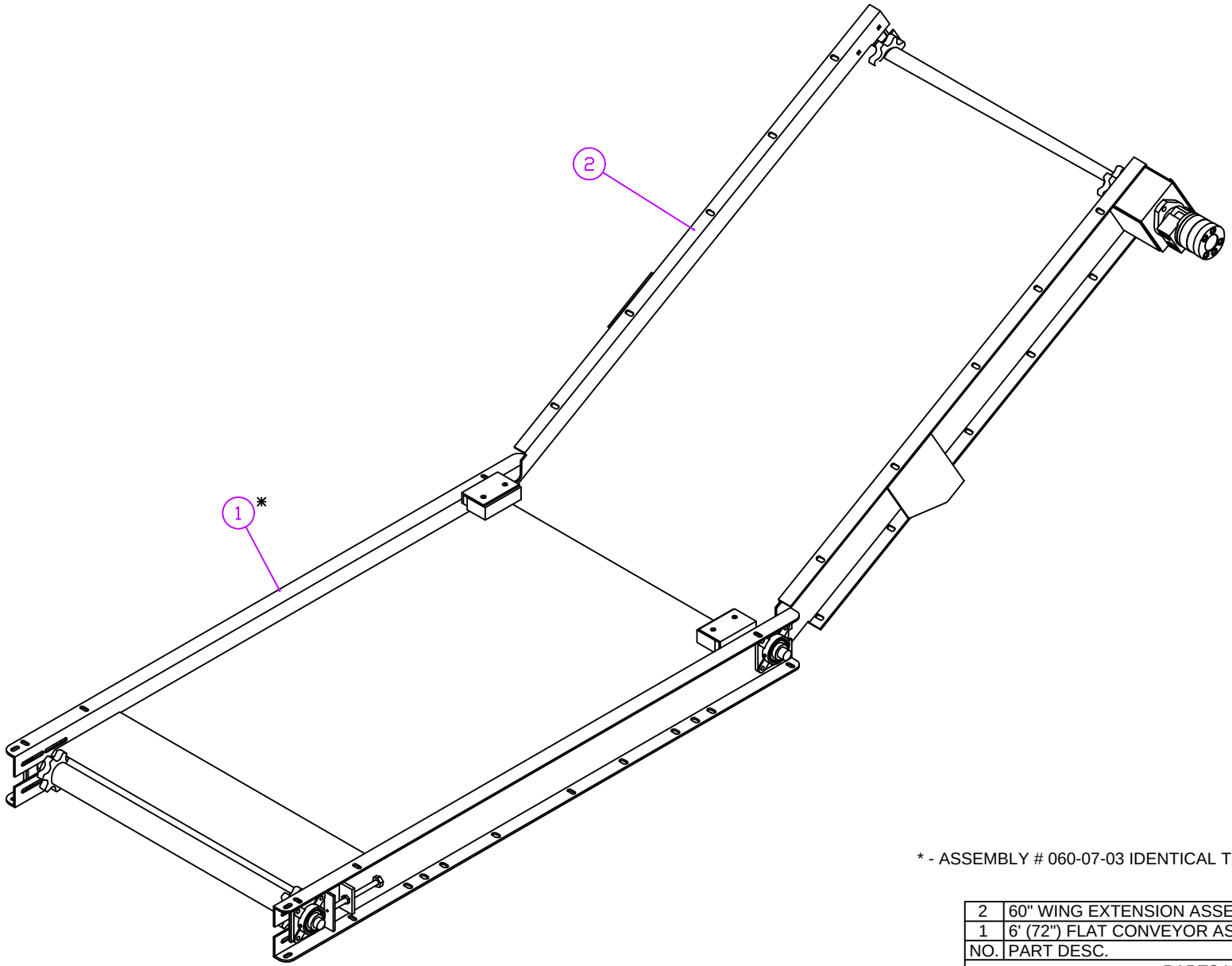

* - ASSEMBLY # 060-07-03 IDENTICAL TO ASSEMBLY # 060-08-03.

NO.	PART DESC.	QTY	PART NO.
2	60" WING EXTENSION ASSEMBLY	1	060-07-04
1	6' (72") FLAT CONVEYOR ASSEMBLY*	1	060-07-03

PARTS LIST

DRAWN BY: D. RODGERS

DATE: MAY 24/00

MODEL: ALL APPLICABLE

SHEET: 1 of 1

PART/ASSEMBLY NO: 060-07-02

JAY•LOR Fabricating Inc

TITLE: 6' CONVEYOR W/ 60" WING EXTENSION: COMPLETE ASSEMBLY W/O APRON CHAIN, SHIELDS, AND HOSES

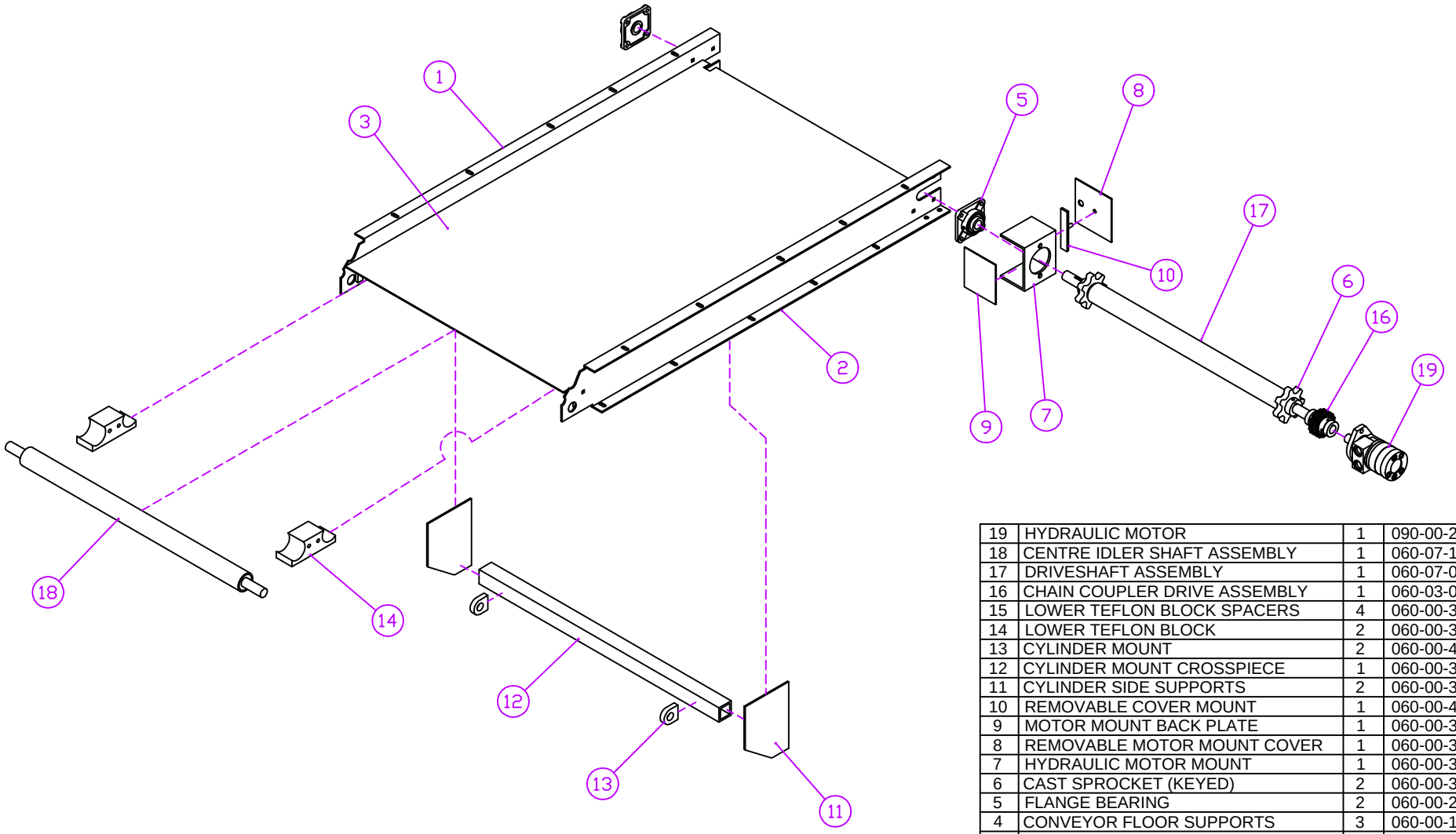

NO.	PART DESC.	QTY	PART NO.
19	HYDRAULIC MOTOR	1	090-00-26
18	CENTRE IDLER SHAFT ASSEMBLY	1	060-07-11
17	DRIVESHAFT ASSEMBLY	1	060-07-08
16	CHAIN COUPLER DRIVE ASSEMBLY	1	060-03-00
15	LOWER TEFLON BLOCK SPACERS	4	060-00-39
14	LOWER TEFLON BLOCK	2	060-00-38
13	CYLINDER MOUNT	2	060-00-41
12	CYLINDER MOUNT CROSSPIECE	1	060-00-35
11	CYLINDER SIDE SUPPORTS	2	060-00-34
10	REMOVABLE COVER MOUNT	1	060-00-40
9	MOTOR MOUNT BACK PLATE	1	060-00-33
8	REMOVABLE MOTOR MOUNT COVER	1	060-00-32
7	HYDRAULIC MOTOR MOUNT	1	060-00-31
6	CAST SPROCKET (KEYED)	2	060-00-30
5	FLANGE BEARING	2	060-00-20
4	CONVEYOR FLOOR SUPPORTS	3	060-00-19
3	WING CONVEYOR FLOOR	1	060-00-11
2	60" RIGHT CONVEYOR SIDE	1	060-00-10
1	60" LEFT CONVEYOR SIDE	1	060-00-09

PARTS LIST

DRAWN BY: D. RODGERS

DATE: MAY 24/00

MODEL: ALL APPLICABLE

SHEET: 1 of 1

PART/ASSEMBLY NO: 060-07-04

TITLE: 60" WING EXTENSION CONVEYOR ASSEMBLY

JAY•LOR Fabricating Inc

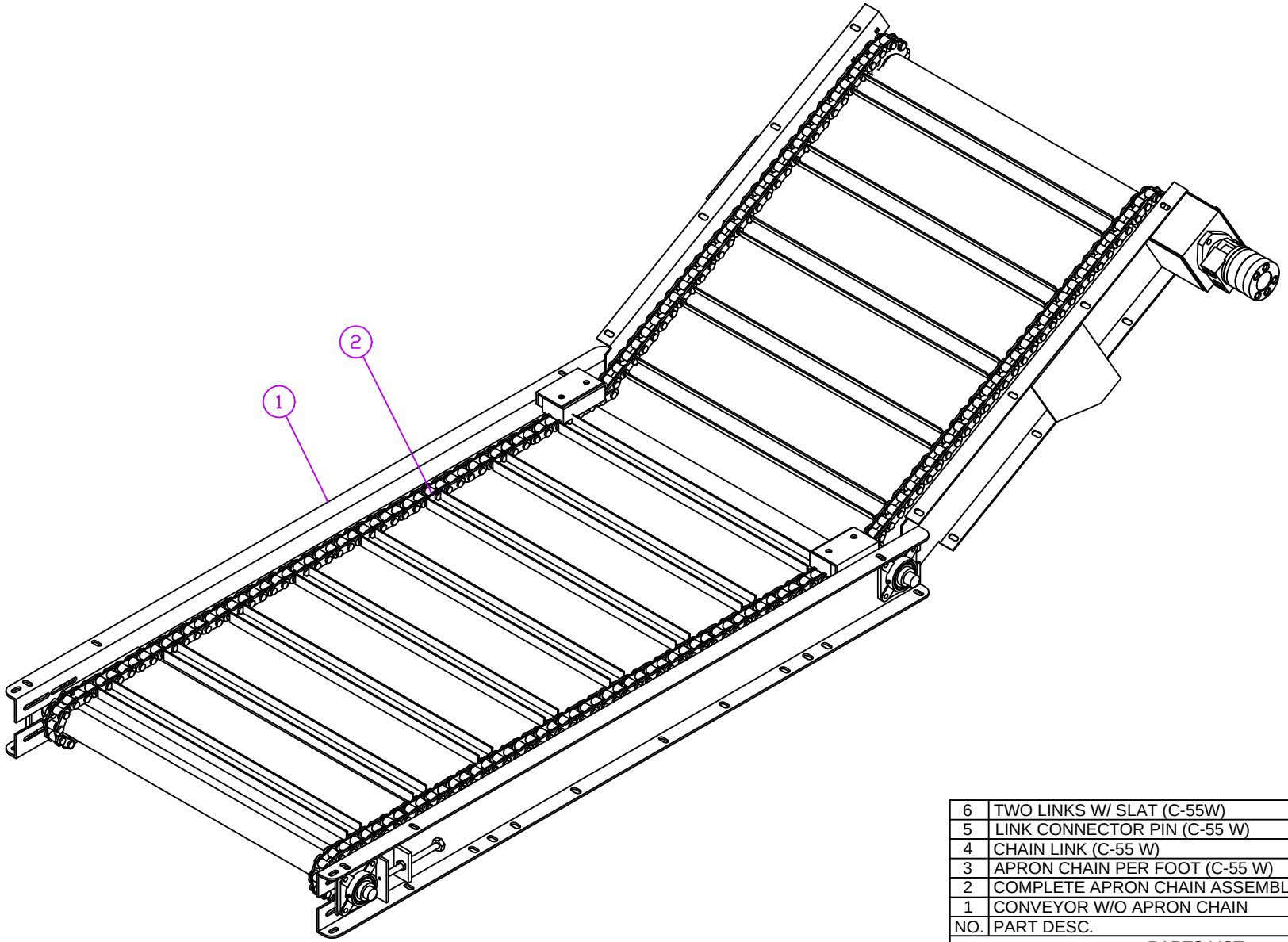

NO.	PART DESC.	QTY	PART NO.
6	TWO LINKS W/ SLAT (C-55W)	1	060-01-04
5	LINK CONNECTOR PIN (C-55 W)	1	060-01-03
4	CHAIN LINK (C-55 W)	1	060-01-01
3	APRON CHAIN PER FOOT (C-55 W)	1	060-01-00
2	COMPLETE APRON CHAIN ASSEMBLY	1	060-08-05
1	CONVEYOR W/O APRON CHAIN	1	060-08-02

PARTS LIST

DRAWN BY: D. RODGERS

DATE: MAY 23/00

MODEL: ALL APPLICABLE

SHEET: 1 of 1

PART/ASSEMBLY NO: 060-08-01

JAY•LOR Fabricating Inc

TITLE: 6' CONVEYOR W/ 41" WING EXTENSION: COMPLETE W/O SHIELDS, AND HOSES

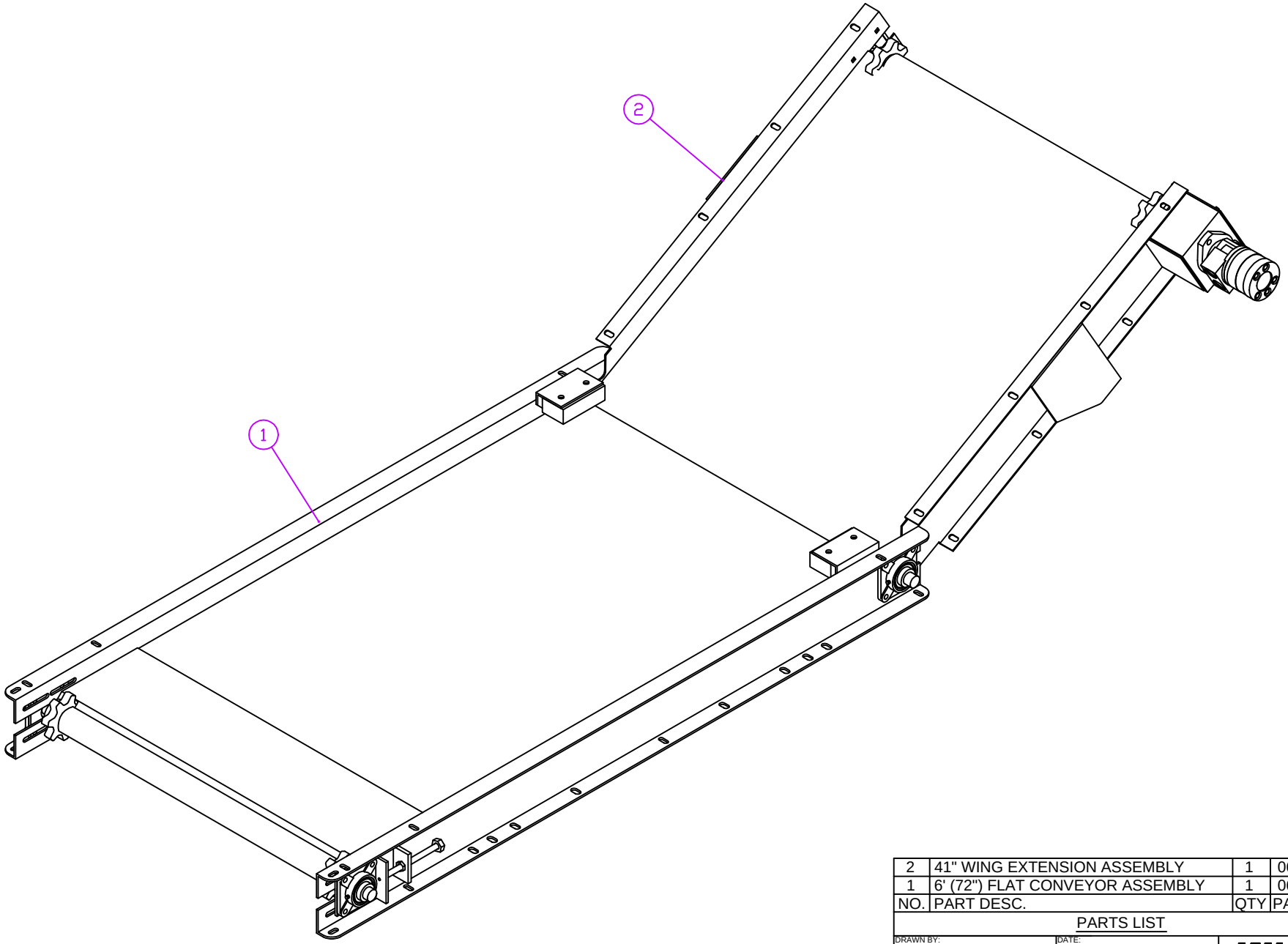

NO.	PART DESC.	QTY	PART NO.
2	41" WING EXTENSION ASSEMBLY	1	060-08-04
1	6' (72") FLAT CONVEYOR ASSEMBLY	1	060-08-03

PARTS LIST

DRAWN BY: D. RODGERS	DATE: MAY 23/00
MODEL: ALL APPLICABLE	SHEET: 1 of 1
PART/ASSEMBLY NO: 060-08-02	

JAY•LOR Fabricating Inc

TITLE: 6' CONVEYOR W/ 41" WING EXTENSION: COMPLETE ASSEMBLY W/O APRON CHAIN, SHIELDS, AND HOSES

NOTE:

- 6' FLAT CONVEYOR ASSEMBLY W/ # 060-08-03 SAME AS ASSEMBLY #060-07-03.

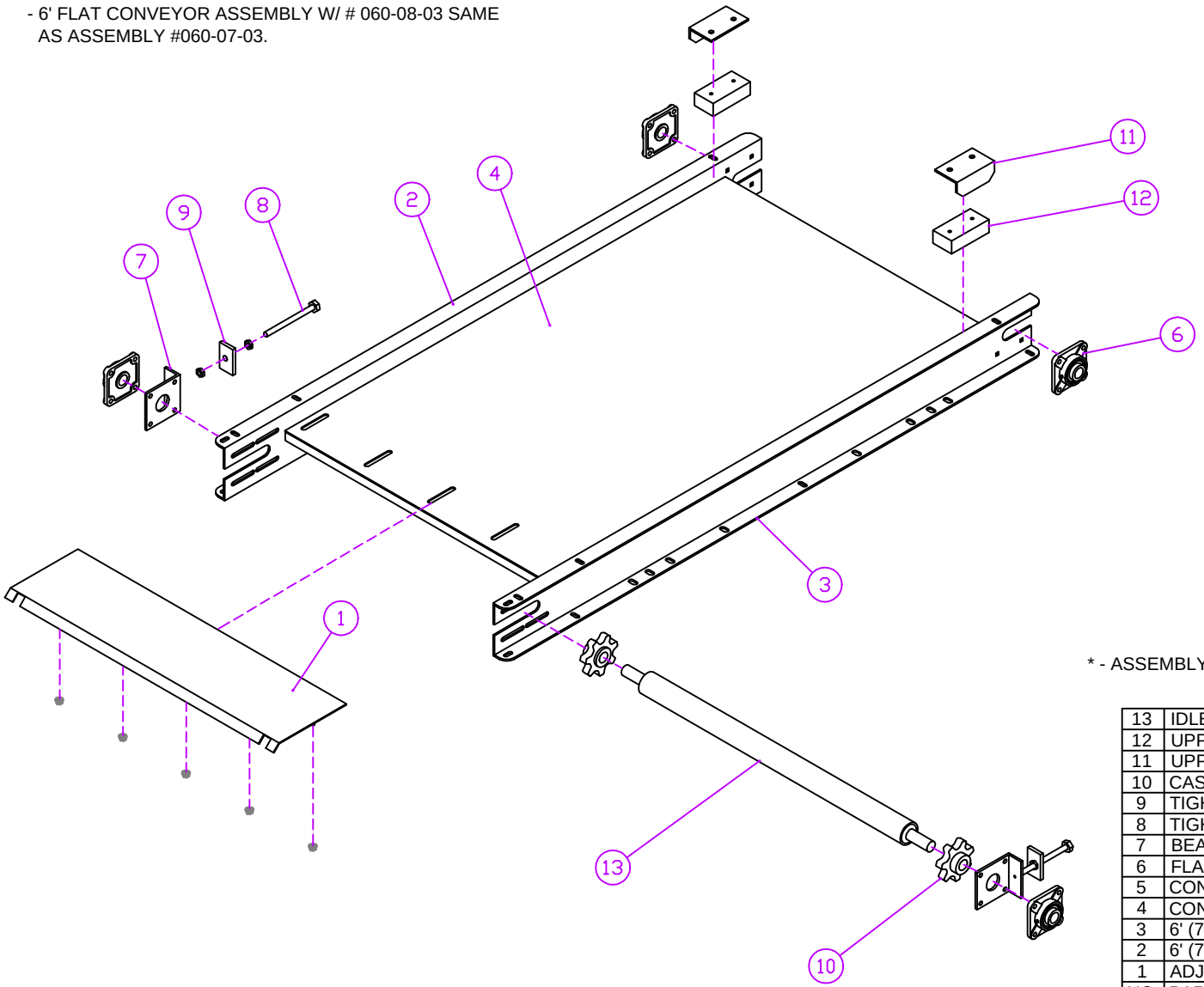

* - ASSEMBLY # 060-08-09 ALSO HAS ASSEMBLY # 060-07-09.

NO.	PART DESC.	QTY	PART NO.
13	IDLER SHAFT ASSEMBLY*	1	060-08-09
12	UPPER TEFLON BLOCK	2	060-00-37
11	UPPER TEFLON BLOCK MOUNT	2	060-00-36
10	CAST SPROCKET (IDLER SHAFT SIDE)	2	060-00-27
9	TIGHTNER ROD SUPPORT BRACKET	2	060-00-23
8	TIGHTNER ROD	2	060-00-22
7	BEARING HOLDER (CHAIN TIGHTNER)	2	060-00-21
6	FLANGE BEARING	4	060-00-20
5	CONVEYOR FLOOR SUPPORTS	5	060-00-18
4	CONVEYOR FLOOR	1	060-00-05
3	6' (72") RIGHT CONVEYOR SIDE	1	060-00-04
2	6' (72") LEFT CONVEYOR SIDE	1	060-00-03
1	ADJUSTABLE FLOOR	1	060-00-01

PARTS LIST

DRAWN BY: D. RODGERS
DATE: MAY 24/00
MODEL: ALL APPLICABLE
SHEET: 1 of 1
PART/ASSEMBLY NO: 060-08-03

TITLE: 6' (72") FLAT CONVEYOR ASSEMBLY (W/O WING EXTENSION OPTION, ALSO HAS PART # 060-07-03)

JAY•LOR Fabricating Inc

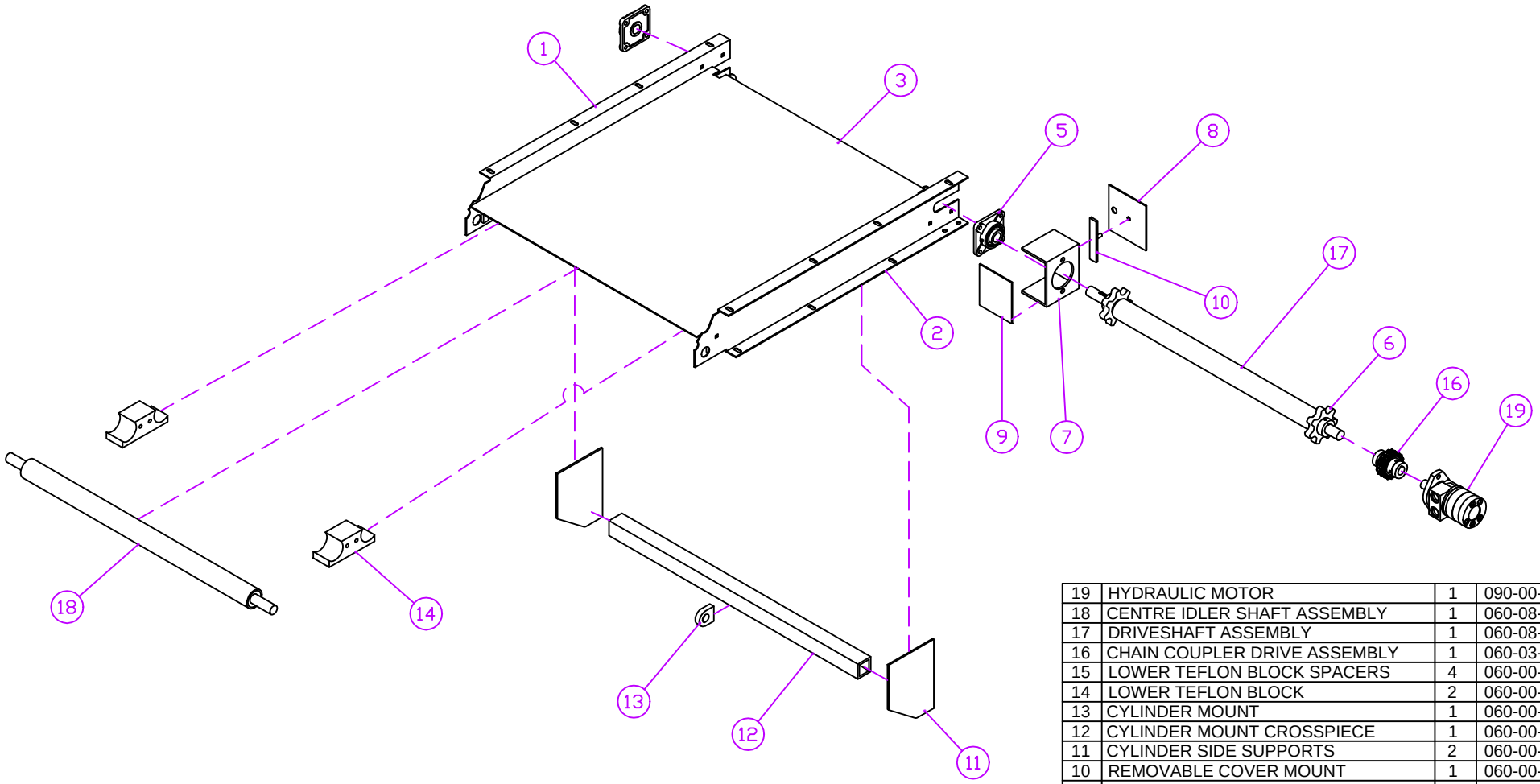

NO.	PART DESC.	QTY	PART NO.
19	HYDRAULIC MOTOR	1	090-00-26
18	CENTRE IDLER SHAFT ASSEMBLY	1	060-08-11
17	DRIVESHAFT ASSEMBLY	1	060-08-08
16	CHAIN COUPLER DRIVE ASSEMBLY	1	060-03-00
15	LOWER TEFLON BLOCK SPACERS	4	060-00-39
14	LOWER TEFLON BLOCK	2	060-00-38
13	CYLINDER MOUNT	1	060-00-41
12	CYLINDER MOUNT CROSSPIECE	1	060-00-35
11	CYLINDER SIDE SUPPORTS	2	060-00-34
10	REMOVABLE COVER MOUNT	1	060-00-40
9	MOTOR MOUNT BACK PLATE	1	060-00-33
8	REMOVABLE MOTOR MOUNT COVER	1	060-00-32
7	HYDRAULIC MOTOR MOUNT	1	060-00-31
6	CAST SPROCKET (KEYED)	2	060-00-30
5	FLANGE BEARING	2	060-00-20
4	CONVEYOR FLOOR SUPPORTS	2	060-00-19
3	WING CONVEYOR FLOOR	1	060-00-08
2	41" RIGHT CONVEYOR SIDE	1	060-00-07
1	41" LEFT CONVEYOR SIDE	1	060-00-06

PARTS LIST

DRAWN BY: D. RODGERS

DATE: MAY 23/00

MODEL: ALL APPLICABLE

SHEET: 1 of 1

PART/ASSEMBLY NO: 060-08-04

TITLE: 41" WING EXTENSION CONVEYOR ASSEMBLY

JAY•LOR Fabricating Inc

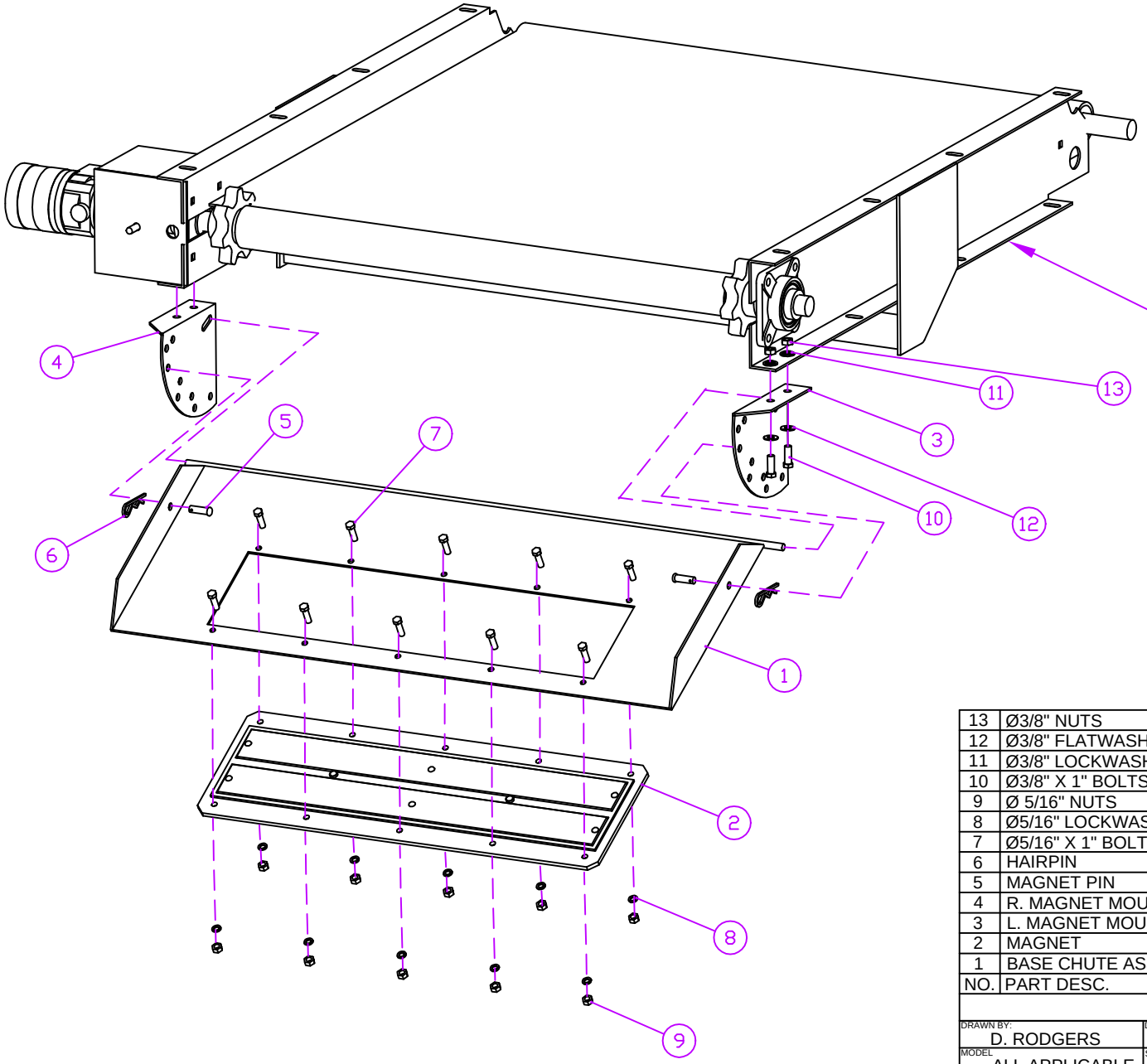

NO.	PART DESC.	QTY	PART NO.
13	Ø3/8" NUTS	4	140-00-85
12	Ø3/8" FLATWASHERS	8	140-00-66
11	Ø3/8" LOCKWASHERS	4	140-00-71
10	Ø3/8" X 1" BOLTS	4	140-00-12
9	Ø 5/16" NUTS	10	140-00-91
8	Ø5/16" LOCKWASHERS	10	140-00-70
7	Ø5/16" X 1" BOLTS	10	140-00-01
6	HAIRPIN	2	010-01-07
5	MAGNET PIN	2	140-00-94
4	R. MAGNET MOUNT	1	060-12-05
3	L. MAGNET MOUNT	1	060-12-04
2	MAGNET	1	060-12-03
1	BASE CHUTE ASSEMBLY	1	060-12-01

PARTS LIST

DRAWN BY: D. RODGERS
DATE: MAY 25/00
MODEL: ALL APPLICABLE
SHEET: 1 of 1
PART/ASSEMBLY NO: 060-12-00

JAY•LOR Fabricating Inc

TITLE: ADJUSTABLE MAGNET CHUTE ASSEMBLY FOR STANDARD CONVEYORS

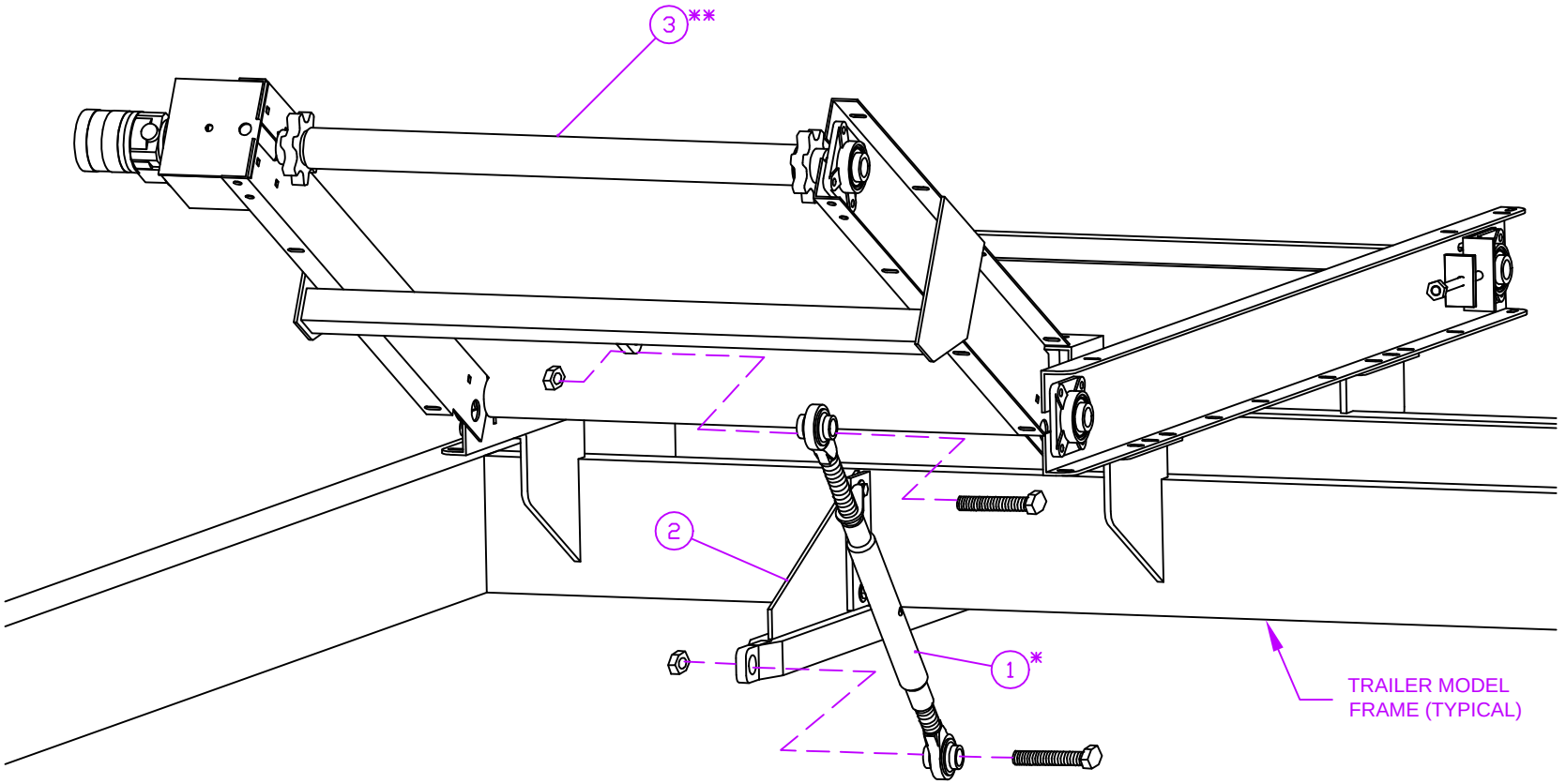

* - INCLUDES MOUNTING HARDWARE
** - MANUAL LIFT OPTION AVAILABLE ONLY
W/ 6' CONVEYOR W/ 41" WING EXTENSION.

NO.	PART DESC.	QTY	PART NO.
3	6' CONVEYOR W/ 41" EXTENSION**	1	060-08-01
2	CONVEYOR ATTACHMENT ASSEMBLY	1	025-08-01
1	MANUAL LIFT WING BRACE*	1	060-00-80

PARTS LIST

DRAWN BY: D. RODGERS
DATE: MAY 26/00
MODEL: 2425
SHEET: 1 of 1
PART/ASSEMBLY NO: 060-17-00

JAY•LOR Fabricating Inc

TITLE: MANUAL WING CONVEYOR LIFT ASSEMBLY - FOR 6' W/ 41" EXTENSION CONVEYORS W/ DELETION OF HYDRAULIC OPTION.

JAY•LOR®

Cutter • Mixer • Feeder

07 - DRIVELINE

"Putting the 'Total' into TMR"

JAY-LOR® Fabricating Inc.
RR # 2 Orton, Ontario, Canada, L0N 1N0 Tel: (519) 787-9353 Fax: (519) 787-7053

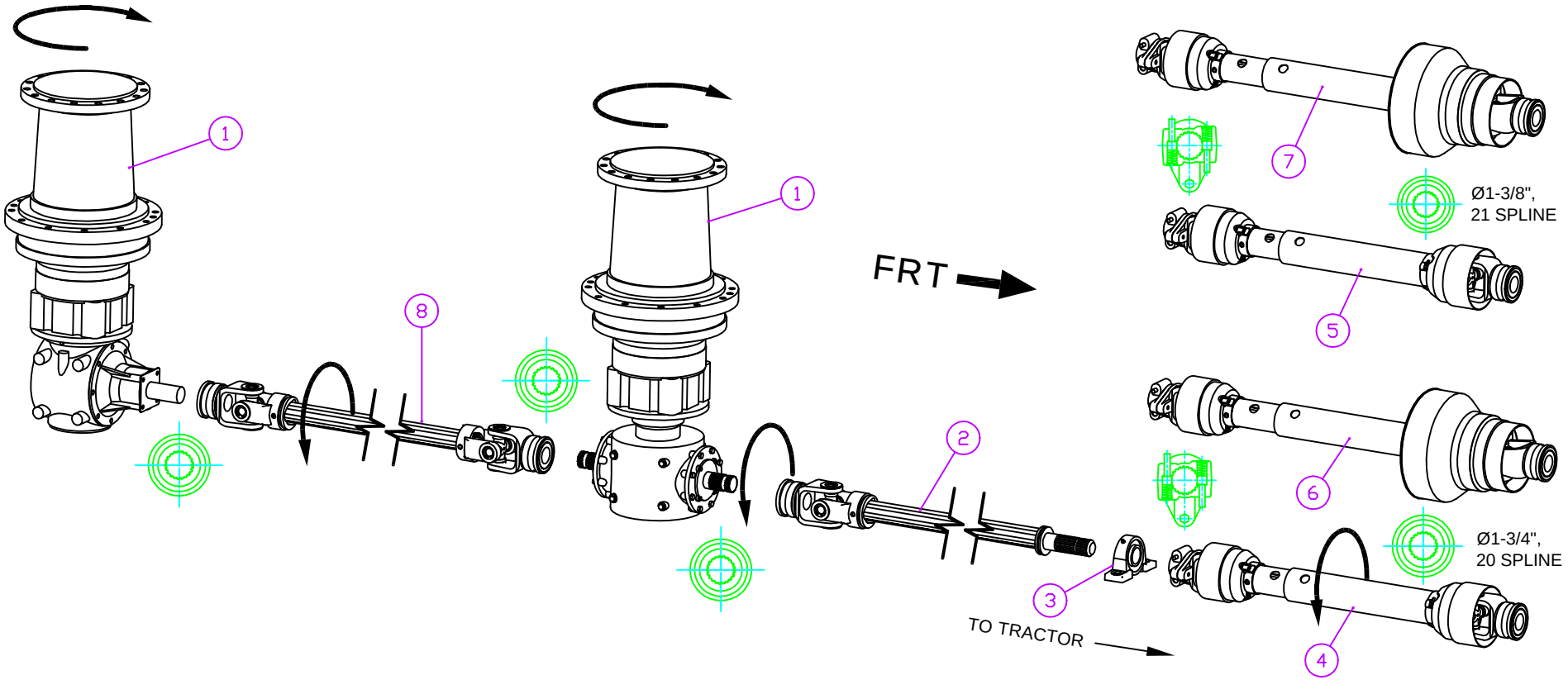

NOTES:

- ASSEMBLY #070-25-01 (ITEM 6) OPTION EXTRA, DELETES ASSEMBLY #070-22-01 (ITEM 4).
- ASSEMBLY #070-25-02 (ITEM 7) OPTION EXTRA, DELETES ASSEMBLY #070-22-02 (ITEM 5).
- ASSEMBLIES #070-22-01 AND #070-25-01 (ITEMS 4 AND 6) ARE Ø1-3/4", 20 SPLINE AT BOTH ENDS.
- ASSEMBLIES #070-22-02 AND #070-25-02 (ITEMS 5 AND 7) ARE Ø1-3/8", 21 SPLINE AT TRACTOR END, Ø1-3/4", 20-SPLINE AT MIXER END.

NO.	PART DESC.	QTY	PART NO.
8	#8 DRIVESHAFT ASSEMBLY	1	079-00-01
7	#8 CV PTO SHAFT (1000 RPM) *OPTION*	1	070-25-02
6	#8 CV PTO SHAFT (1000 RPM) *OPTION*	1	070-25-01
5	#8 STANDARD PTO SHAFT (1000 RPM)	1	070-22-02
4	#8 STANDARD PTO SHAFT (1000 RPM)	1	070-22-01
3	BEARING, PILLOW BLOCK	1	070-00-07
2	#8 DRIVESHAFT ASSEMBLY	1	070-04-00
1	PG 1802 VM BTI GEARBOX W/ T-269 B	2	070-60-01

PARTS LIST

DRAWN BY: D. RODGERS
DATE: DEC 20/00
MODEL: ALL APPLICABLE
SHEET: 1 of 1
PART/ASSEMBLY NO: 079-05-01

TITLE: STANDARD DRIVELINE ASSEMBLY FOR MODELS 2725/2875/21000

JAY•LOR Fabricating Inc

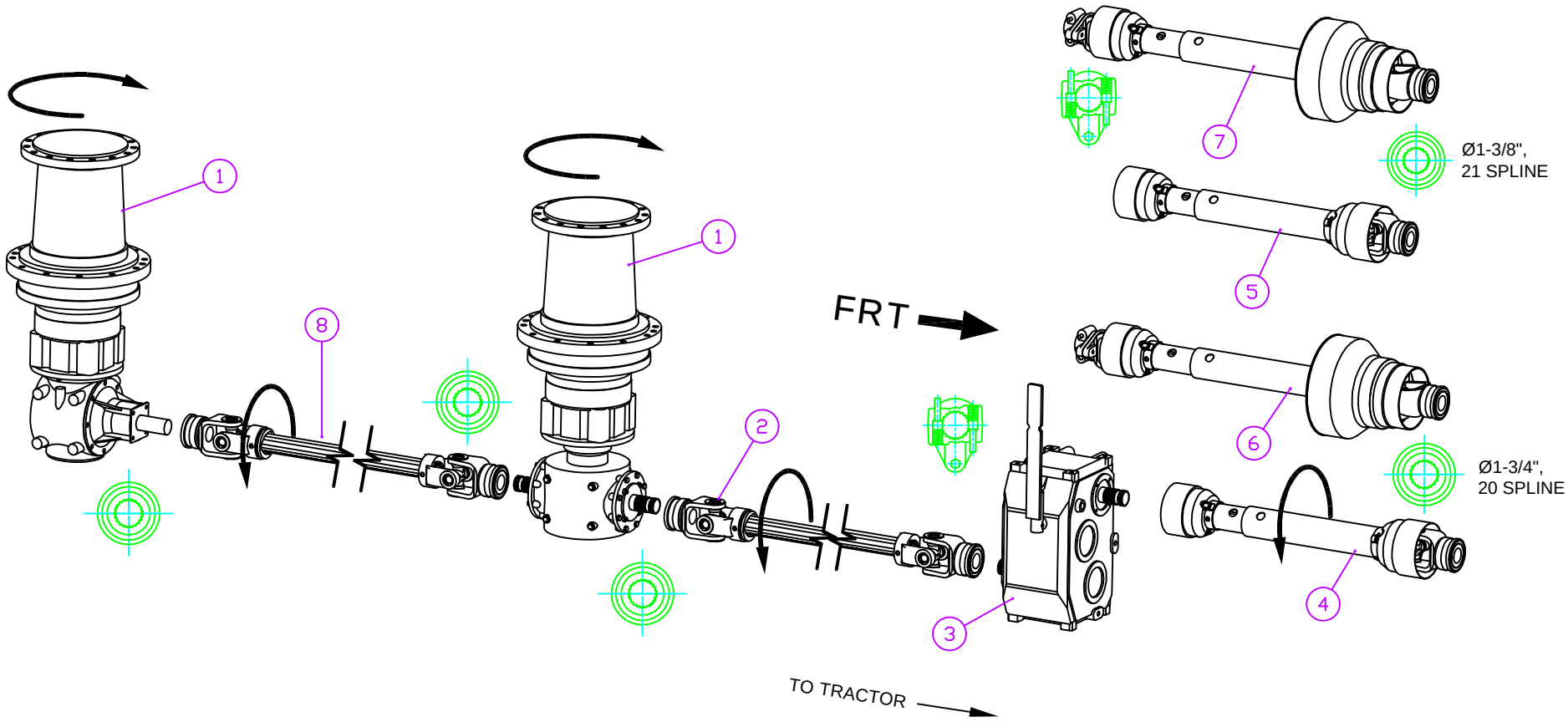

NOTES:

- ASSEMBLY #070-25-01 (ITEM 6) OPTION EXTRA, DELETES ASSEMBLY #079-00-03 (ITEM 4).
- ASSEMBLY #070-25-02 (ITEM 7) OPTION EXTRA, DELETES ASSEMBLY #079-00-04 (ITEM 5).
- ASSEMBLIES #079-00-03 AND #070-25-01 (ITEMS 4 AND 6) ARE Ø1-3/4", 20 SPLINE AT BOTH ENDS.
- ASSEMBLIES #079-00-04 AND #070-25-02 (ITEMS 5 AND 7) ARE Ø1-3/8", 21 SPLINE AT TRACTOR END, Ø1-3/4", 20-SPLINE AT MIXER END.

NO.	PART DESC.	QTY	PART NO.
8	#8 DRIVESHAFT ASSEMBLY	1	079-00-01
7	#8 CV PTO SHAFT (1000 RPM) *OPTION*	1	070-25-02
6	#8 CV PTO SHAFT (1000 RPM) *OPTION*	1	070-25-01
5	#8 STANDARD PTO SHAFT (1000 RPM)	1	079-00-04
4	#8 STANDARD PTO SHAFT (1000 RPM)	1	079-00-03
3	2-SPEED TRANSMISSION (MODEL C3A)	1	070-45-01
2	#8 DRIVESHAFT ASSEMBLY	1	079-00-02
1	PG 1802 VM BTI GEARBOX W/ T-269 B	2	070-60-01

PARTS LIST

DRAWN BY: D. RODGERS
DATE: DEC 20/00
MODEL: ALL APPLICABLE
SHEET: 1 of 1
PART/ASSEMBLY NO: 079-05-02

TITLE: DRIVELINE ASSEMBLY FOR MODELS 2725/2875/21000 EQUIPPED W/ C3A 2-SPEED TRANSMISSION

JAY•LOR Fabricating Inc

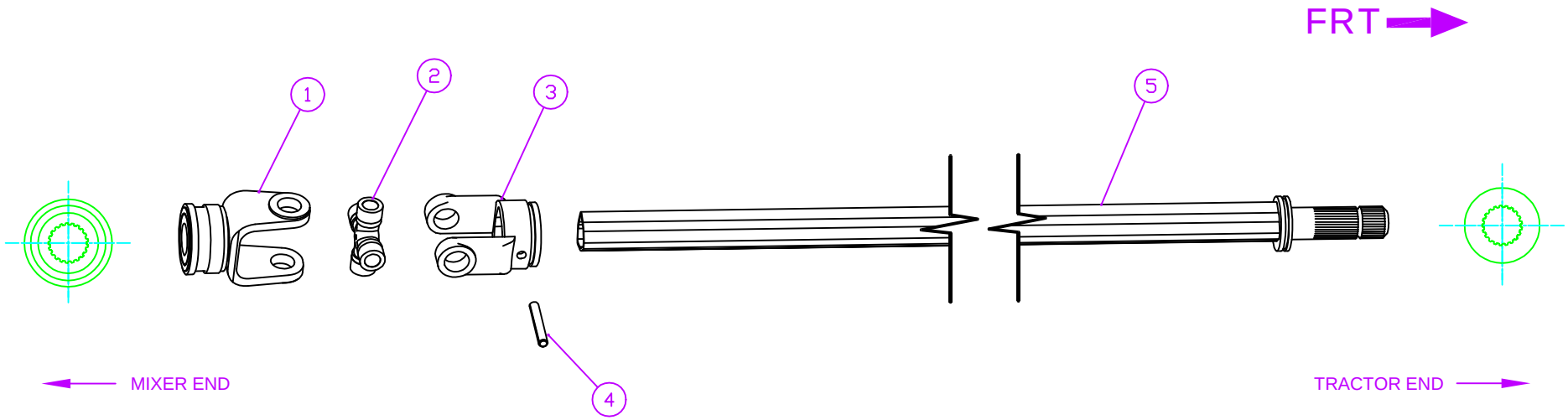

NO.	PART DESC.	QTY	PART NO.
5	#8 DRIVESHAFT W/ SPLINED END	1	070-04-06
4	ROLL PIN FOR OUTER TUBE	1	070-04-04
3	#8 YOKE, TUBE END	1	070-04-03
2	#8 CROSS (35.0mm X 106.5mm)	1	070-04-02
1	#8 YOKE - 1-3/4", 20-SPLINE	1	070-04-01

PARTS LIST

DRAWN BY: D. RODGERS
DATE: MAY 19/00
MODEL: ALL APPLICABLE
SHEET: 1 of 1
PART/ASSEMBLY NO: 070-04-00

TITLE: COMPLETE #8 STANDARD DRIVESHAFT ASSEMBLY - W/ SLIDE COLLAR YOKE

JAY•LOR Fabricating Inc

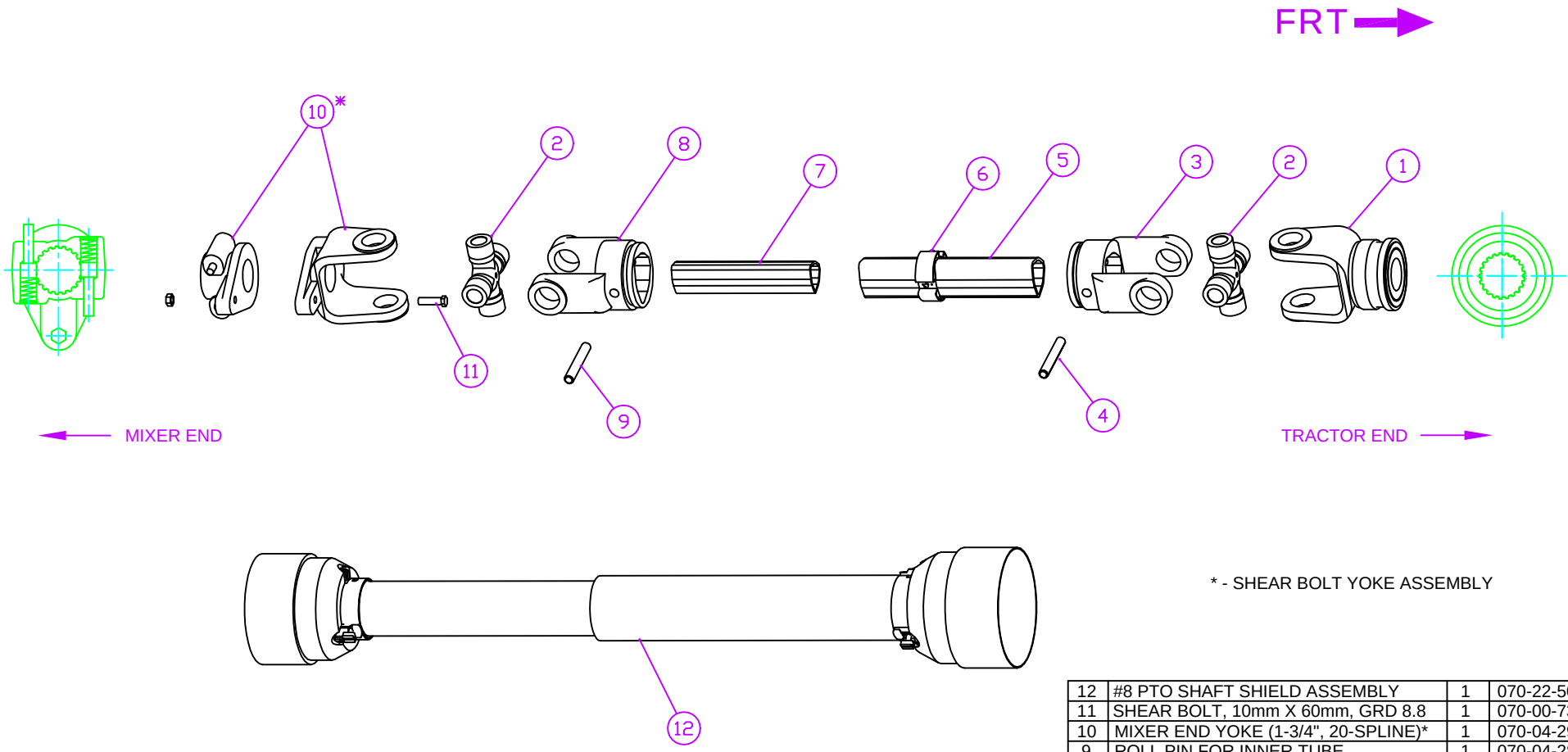

* - SHEAR BOLT YOKE ASSEMBLY

NO.	PART DESC.	QTY	PART NO.
12	#8 PTO SHAFT SHIELD ASSEMBLY	1	070-22-50
11	SHEAR BOLT, 10mm X 60mm, GRD 8.8	1	070-00-73
10	MIXER END YOKE (1-3/4", 20-SPLINE)*	1	070-04-29
9	ROLL PIN FOR INNER TUBE	1	070-04-28
8	#8 YOKE, INNER TUBE, MIXER END	1	070-04-27
7	#8 PTO INNER TUBE (MIXER END)	1	070-04-26
6	BUSHING FOR OUTER TUBE	1	070-04-25
5	#8 PTO OUTER TUBE (TRACTOR END)	1	070-04-24
4	ROLL PIN FOR OUTER TUBE	1	070-04-04
3	#8 YOKE, OUTER TUBE, TRACTOR END	1	070-04-03
2	#8 CROSS (35.0mm X 106.5mm)	2	070-04-02
1	TRACTOR END YOKE (1-3/4",20-SPLINE)	1	070-04-01

PARTS LIST

DRAWN BY: D. RODGERS
DATE: AUG 15/00
MODEL: ALL APPLICABLE
SHEET: 1 of 1
PART/ASSEMBLY NO: 070-22-01

JAY•LOR Fabricating Inc

TITLE: #8 PTO SHAFT: 1-3/4", 20-SPLINE TRACTOR END, 1-3/4" 20-SPLINE MIXER END (1000 RPM)

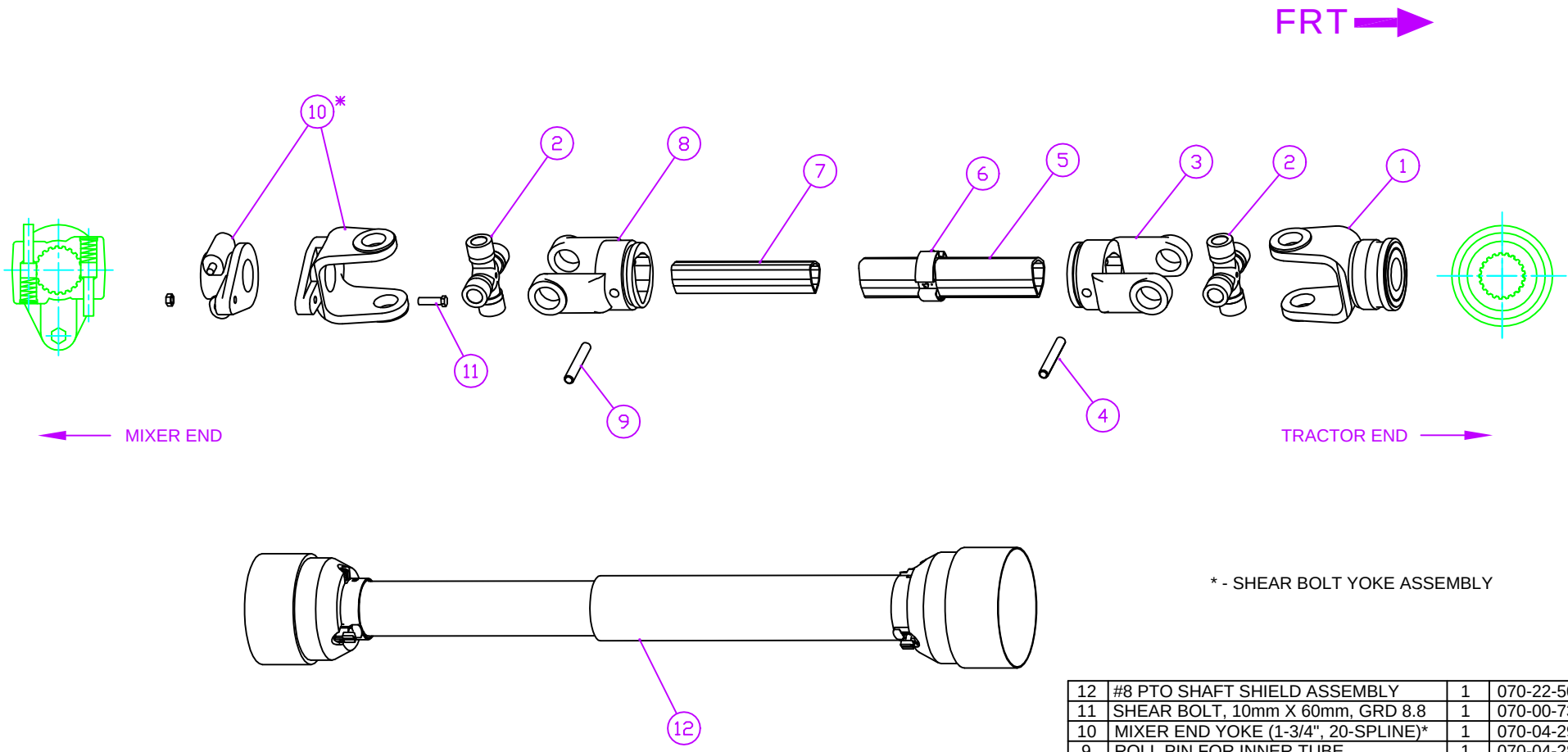

* - SHEAR BOLT YOKE ASSEMBLY

NO.	PART DESC.	QTY	PART NO.
12	#8 PTO SHAFT SHIELD ASSEMBLY	1	070-22-50
11	SHEAR BOLT, 10mm X 60mm, GRD 8.8	1	070-00-73
10	MIXER END YOKE (1-3/4", 20-SPLINE)*	1	070-04-29
9	ROLL PIN FOR INNER TUBE	1	070-04-28
8	#8 YOKE, INNER TUBE, MIXER END	1	070-04-27
7	#8 PTO INNER TUBE (MIXER END)	1	070-04-26
6	BUSHING FOR OUTER TUBE	1	070-04-25
5	#8 PTO OUTER TUBE (TRACTOR END)	1	070-04-24
4	ROLL PIN FOR OUTER TUBE	1	070-04-04
3	#8 YOKE, OUTER TUBE, TRACTOR END	1	070-04-03
2	#8 CROSS (35.0mm X 106.5mm)	2	070-04-02
1	TRACTOR END YOKE (1-3/8",21-SPLINE)	1	070-04-31

PARTS LIST

DRAWN BY: D. RODGERS
DATE: AUG 15/00
MODEL: ALL APPLICABLE
SHEET: 1 of 1
PART/ASSEMBLY NO: 070-22-02

JAY•LOR Fabricating Inc

TITLE: #8 PTO SHAFT: 1-3/8", 21-SPLINE TRACTOR END, 1-3/4" 20-SPLINE MIXER END (1000 RPM)

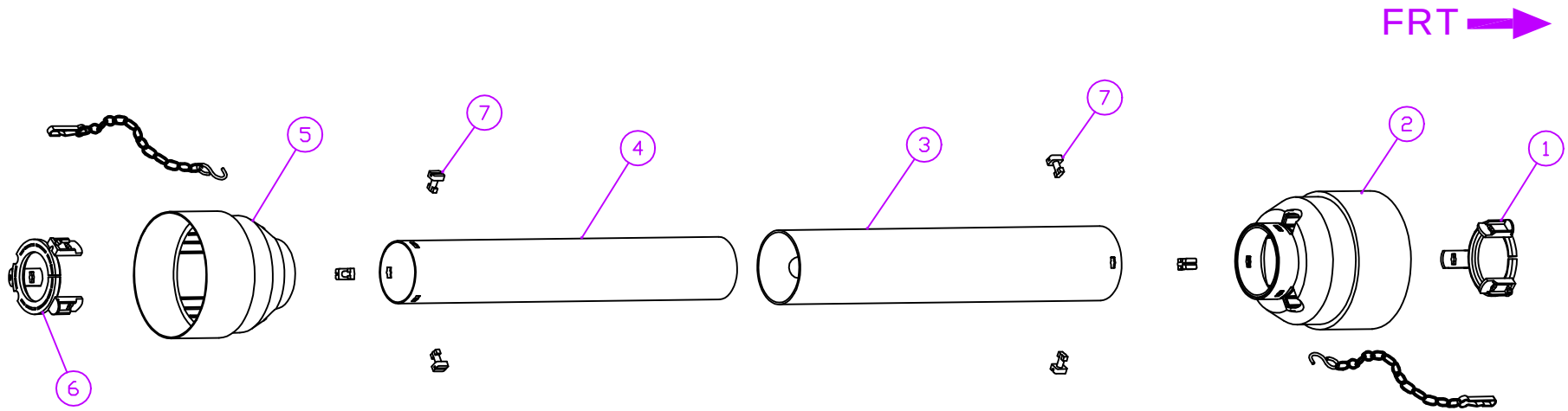

NO.	PART DESC.	QTY	PART NO.
7	GUARD BOLT (PLASTIC)	6	070-00-59
6	RETAINING COLLAR (MIXER END)	1	070-04-57
5	CONE GUARD (MIXER END)	1	070-04-56
4	INNER TUBE SHIELD (MIXER END)	1	070-04-55
3	OUTER TUBE SHIELD (TRACTOR END)	1	070-04-54
2	CONE GUARD (TRACTOR END)	1	070-04-53
1	RETAINING COLLAR (TRACTOR END)	1	070-04-52

PARTS LIST

DRAWN BY: D. RODGERS
DATE: DEC 19/00
MODEL: ALL APPLICABLE
SHEET: 1 of 1
PART/ASSEMBLY NO: 070-22-50

TITLE: COMPLETE GUARD KIT FOR #8 STANDARD PTO SHAFT

JAY•LOR Fabricating Inc

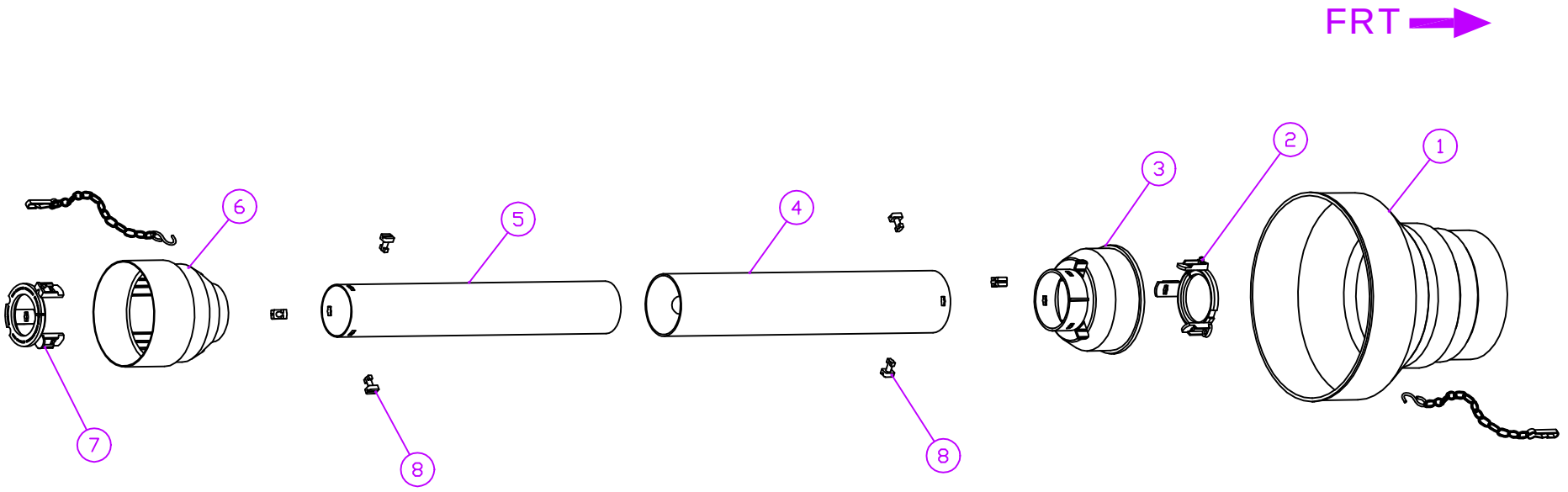

NO.	PART DESC.	QTY	PART NO.
8	GUARD BOLT (PLASTIC)	6	070-00-59
7	RETAINING COLLAR (MIXER END)	1	070-04-57
6	CONE GUARD (MIXER END)	1	070-04-56
5	INNER TUBE SHIELD (MIXER END)	1	070-04-55
4	OUTER TUBE SHIELD (TRACTOR END)	1	070-04-54
3	CONE GUARD (TRACTOR END)	1	070-04-53
2	RETAINING COLLAR (TRACTOR END)	1	070-04-52
1	OUTER CONE GUARD (TRACTOR END)	1	070-04-51

PARTS LIST

DRAWN BY: D. RODGERS
DATE: JUL 20/00
MODEL: ALL APPLICABLE
SHEET: 1 of 1
PART/ASSEMBLY NO: 070-24-50

TITLE: COMPLETE GUARD KIT FOR #8 CV PTO SHAFT

JAY•LOR Fabricating Inc

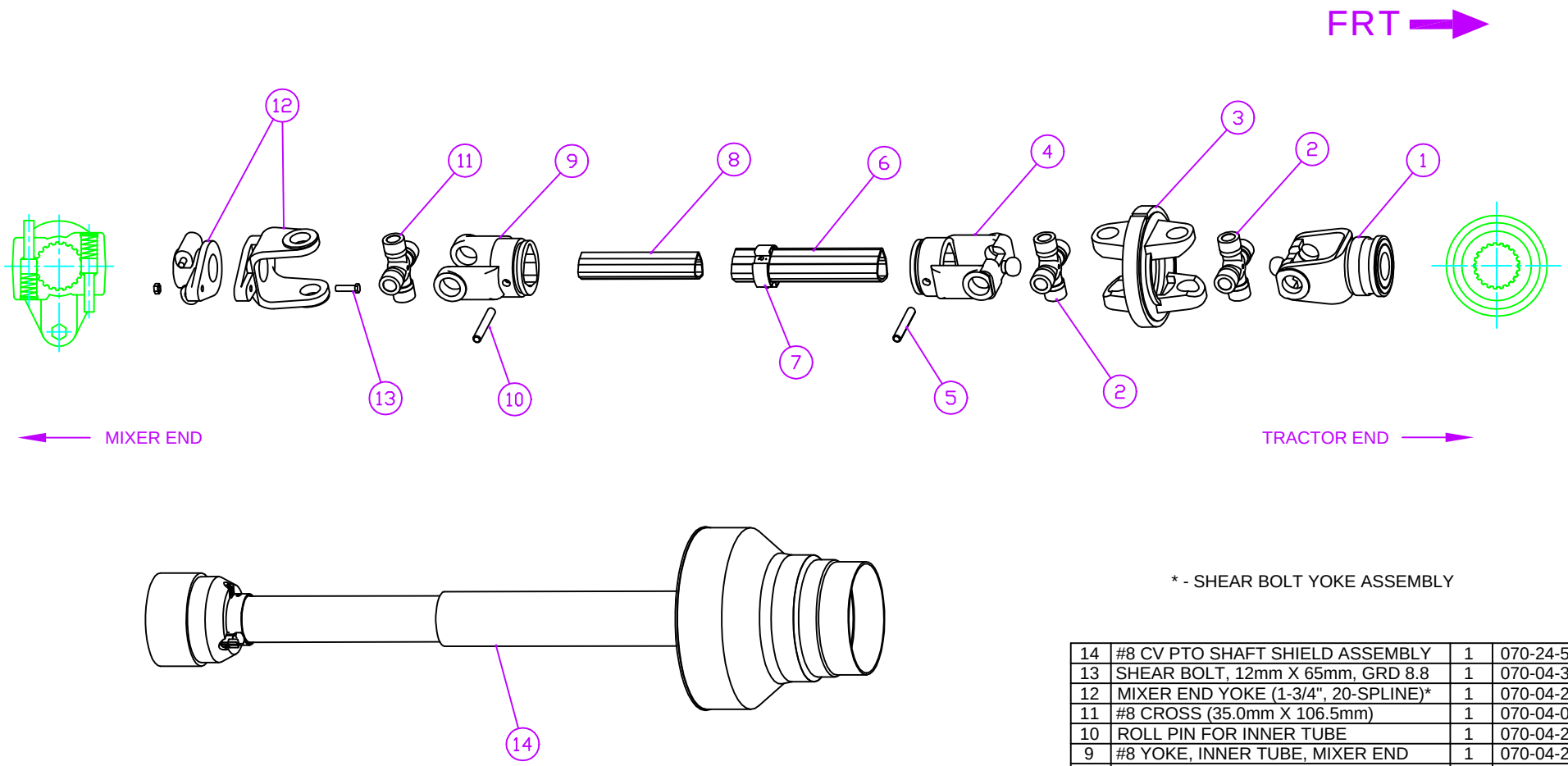

* - SHEAR BOLT YOKE ASSEMBLY

NO.	PART DESC.	QTY	PART NO.
14	#8 CV PTO SHAFT SHIELD ASSEMBLY	1	070-24-50
13	SHEAR BOLT, 12mm X 65mm, GRD 8.8	1	070-04-30
12	MIXER END YOKE (1-3/4", 20-SPLINE)*	1	070-04-29
11	#8 CROSS (35.0mm X 106.5mm)	1	070-04-02
10	ROLL PIN FOR INNER TUBE	1	070-04-28
9	#8 YOKE, INNER TUBE, MIXER END	1	070-04-27
8	#8 PTO INNER TUBE (MIXER END)	1	070-04-26
7	BUSHING FOR OUTER TUBE	1	070-04-25
6	#8 PTO OUTER TUBE (TRACTOR END)	1	070-04-24
5	ROLL PIN FOR OUTER TUBE	1	070-04-04
4	#8 YOKE, OUTER TUBE, TRACTOR END	1	070-04-23
3	#8 CV YOKE, TRACTOR END	1	070-04-22
2	#8 CROSS (35.0mm X 113.8mm)	2	070-04-21
1	TRACTOR END YOKE(1-3/4", 20-SPLINE)	1	070-04-32

PARTS LIST

DRAWN BY: D. RODGERS
DATE: AUG 16/00
MODEL: ALL APPLICABLE
SHEET: 1 of 1
PART/ASSEMBLY NO: 070-25-01

JAY•LOR Fabricating Inc

TITLE: #8 CV PTO SHAFT: 1-3/4", 20-SPLINE TRACTOR END, 1-3/4" 20-SPLINE MIXER END (1000 RPM)

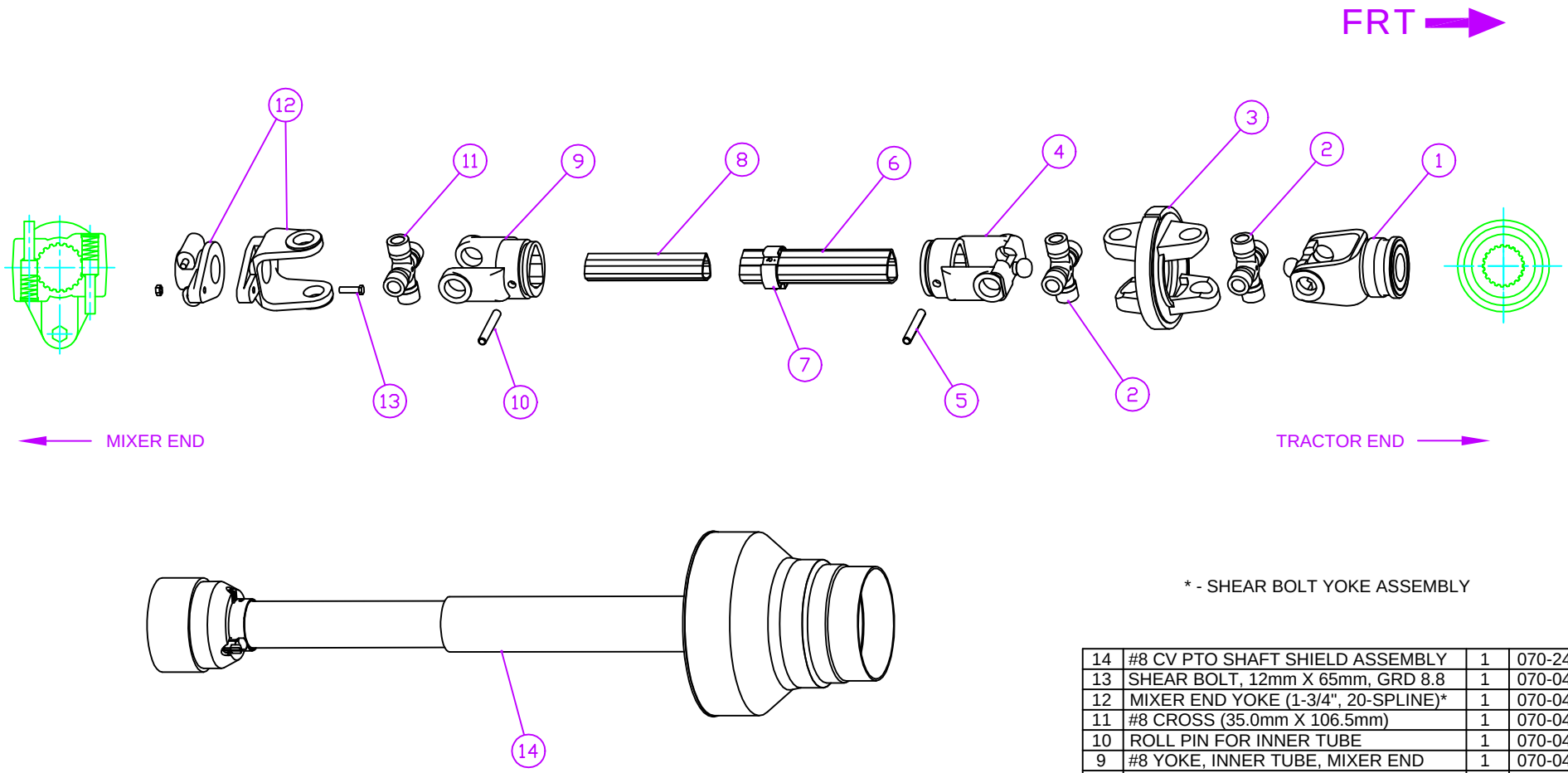

* - SHEAR BOLT YOKE ASSEMBLY

NO.	PART DESC.	QTY	PART NO.
14	#8 CV PTO SHAFT SHIELD ASSEMBLY	1	070-24-50
13	SHEAR BOLT, 12mm X 65mm, GRD 8.8	1	070-04-30
12	MIXER END YOKE (1-3/4", 20-SPLINE)*	1	070-04-29
11	#8 CROSS (35.0mm X 106.5mm)	1	070-04-02
10	ROLL PIN FOR INNER TUBE	1	070-04-28
9	#8 YOKE, INNER TUBE, MIXER END	1	070-04-27
8	#8 PTO INNER TUBE (MIXER END)	1	070-04-26
7	BUSHING FOR OUTER TUBE	1	070-04-25
6	#8 PTO OUTER TUBE (TRACTOR END)	1	070-04-24
5	ROLL PIN FOR OUTER TUBE	1	070-04-04
4	#8 YOKE, OUTER TUBE, TRACTOR END	1	070-04-23
3	#8 CV YOKE, TRACTOR END	1	070-04-22
2	#8 CROSS (35.0mm X 113.8mm)	2	070-04-21
1	TRACTOR END YOKE(1-3/8", 21-SPLINE)	1	070-04-33

PARTS LIST

DRAWN BY: D. RODGERS
DATE: AUG 16/00
MODEL: ALL APPLICABLE
SHEET: 1 of 1
PART/ASSEMBLY NO: 070-25-02

TITLE: #8 CV PTO SHAFT: 1-3/8", 21-SPLINE TRACTOR END, 1-3/4" 20-SPLINE MIXER END (1000 RPM)

JAY•LOR Fabricating Inc

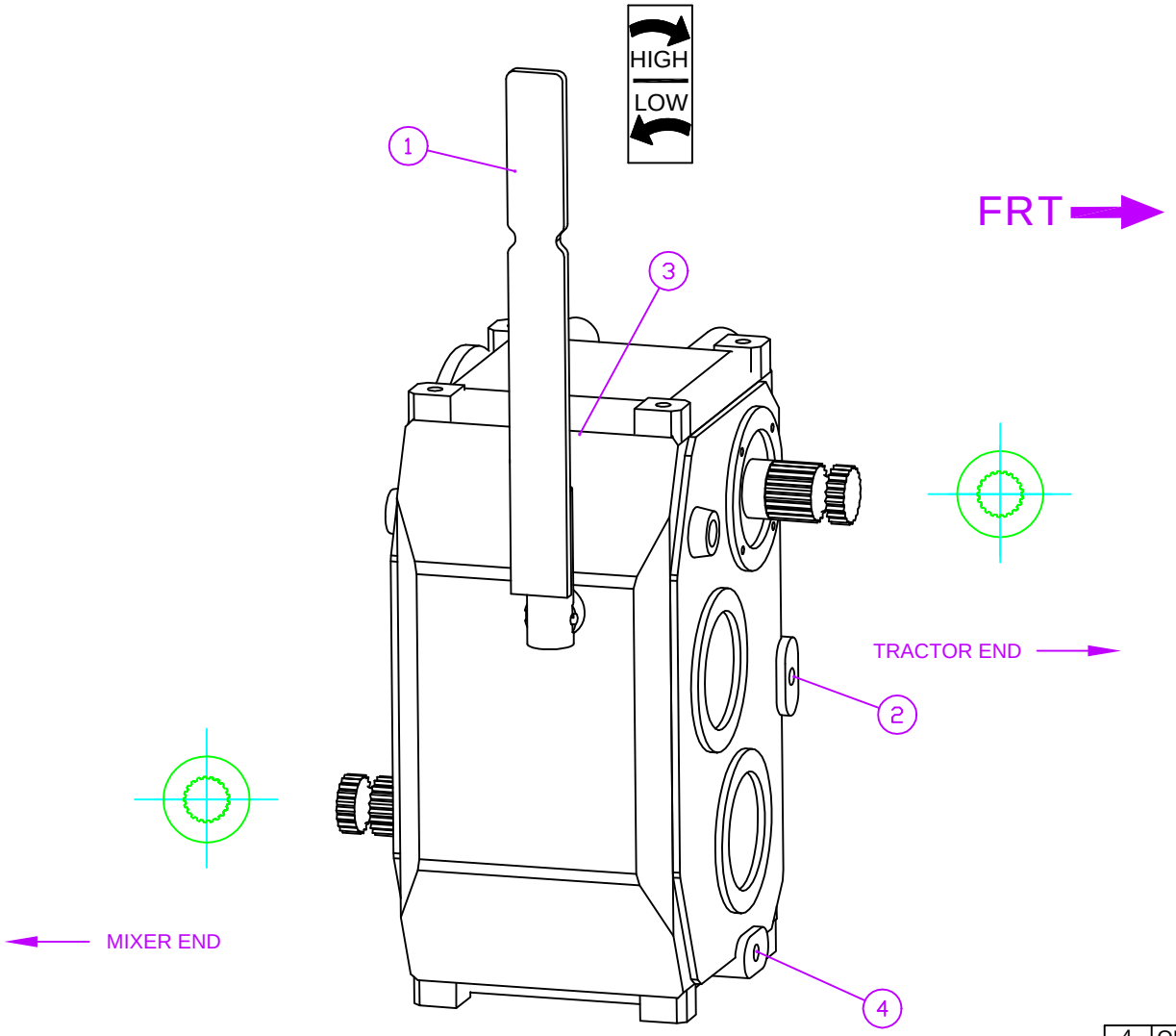

NO.	PART DESC.	QTY	PART NO.
4	OIL DRAIN PLUG	1	070-45-06
3	OIL FILL PLUG	1	070-45-05
2	OIL LEVEL SIGHT GLASS	1	070-45-04
1	SHIFTER HANDLE ASSEMBLY	1	070-45-10

PARTS LIST

DRAWN BY: D. RODGERS
DATE: OCT 31/00
MODEL: ALL APPLICABLE
SHEET: 1 of 1
PART/ASSEMBLY NO: 070-45-01

JAY•LOR Fabricating Inc

TITLE: 2-SPEED TRANSMISSION - MODEL C3A: 1-3/4" 20-SPLINE INPUT SHAFT AND OUTPUT SHAFT

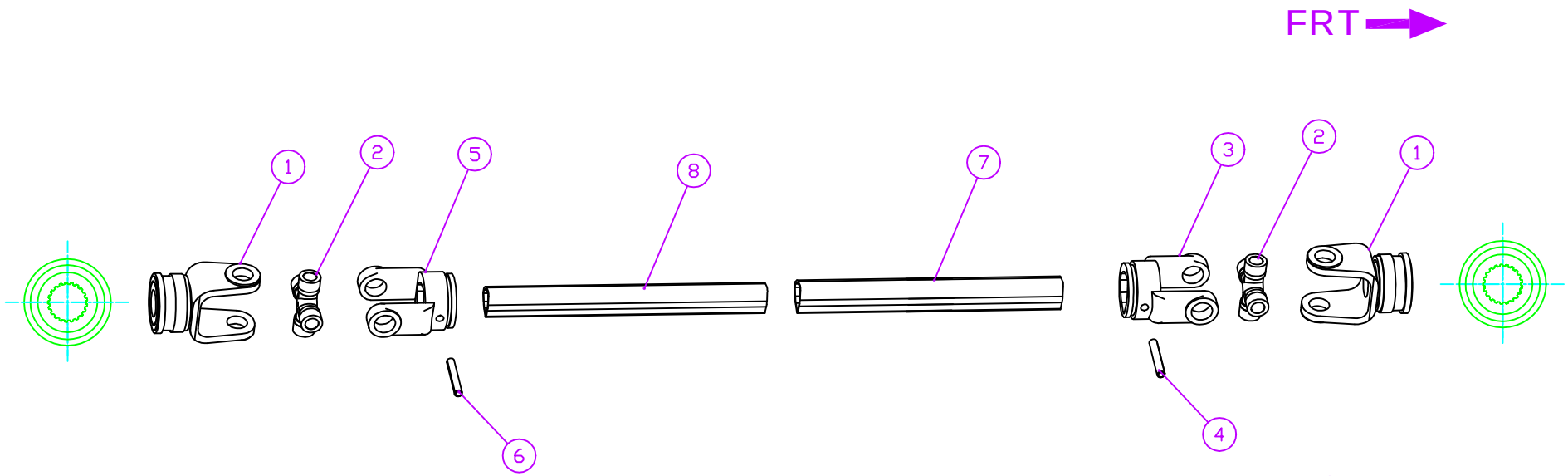

NO.	PART DESC.	QTY	PART NO.
8	#8 DRIVESHAFT INNER TUBE	1	070-04-41
7	#8 DRIVESHAFT OUTER TUBE	1	070-04-40
6	ROLL PIN FOR INNER TUBE	1	070-04-28
5	#8 YOKE, INNER TUBE END	1	070-04-27
4	ROLL PIN FOR OUTER TUBE	1	070-04-04
3	#8 YOKE, OUTER TUBE END	1	070-04-03
2	#8 CROSS (35.0mm X 106.5mm)	2	070-04-02
1	#8 YOKE - 1-3/4", 20-SPLINE	2	070-04-01

PARTS LIST

DRAWN BY: D. RODGERS
DATE: OCT 17/00
MODEL: ALL APPLICABLE
SHEET: 1 of 1
PART/ASSEMBLY NO: 079-00-01

TITLE: COMPLETE #8 STANDARD DRIVESHAFT ASSEMBLY - W/ SLIDE COLLAR YOKES (LOCATED BETWEEN GEARBOXES 1 & 2)

JAY•LOR Fabricating Inc

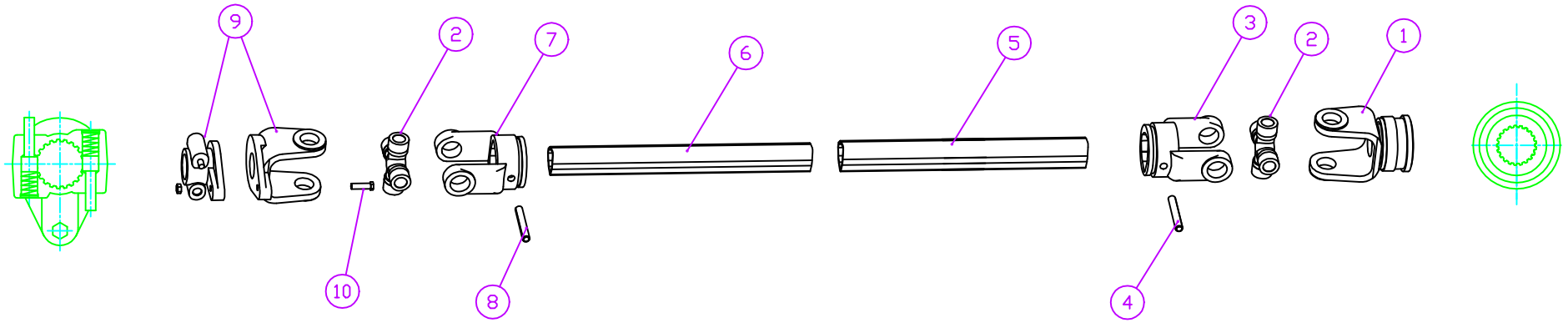

* - SHEAR BOLT YOKE ASSEMBLY

NO.	PART DESC.	QTY	PART NO.
10	SHEAR BOLT, 10mm X 60mm, GRD 8.8	1	070-00-73
9	#8 YOKE (1-3/4", 20-SPLINE)*	1	070-04-29
8	ROLL PIN FOR INNER TUBE	1	070-04-28
7	#8 YOKE, INNER TUBE END	1	070-04-27
6	#8 DRIVESHAFT INNER TUBE	1	070-04-47
5	#8 DRIVESHAFT OUTER TUBE	1	070-04-46
4	ROLL PIN FOR OUTER TUBE	1	070-04-04
3	#8 YOKE, OUTER TUBE END	1	070-04-03
2	#8 CROSS (35.0mm X 106.5mm)	2	070-04-02
1	#8 YOKE - 1-3/4", 20-SPLINE	1	070-04-01

PARTS LIST

DRAWN BY: D. RODGERS
DATE: DEC 18/00
MODEL: ALL APPLICABLE
SHEET: 1 of 1
PART/ASSEMBLY NO: 079-00-02

JAY•LOR Fabricating Inc

TITLE: COMPLETE #8 STANDARD DRIVESHAFT ASSEMBLY - W/ SHEAR BOLT YOKE (LOCATED BETWEEN GEARBOX 1 & C3A)

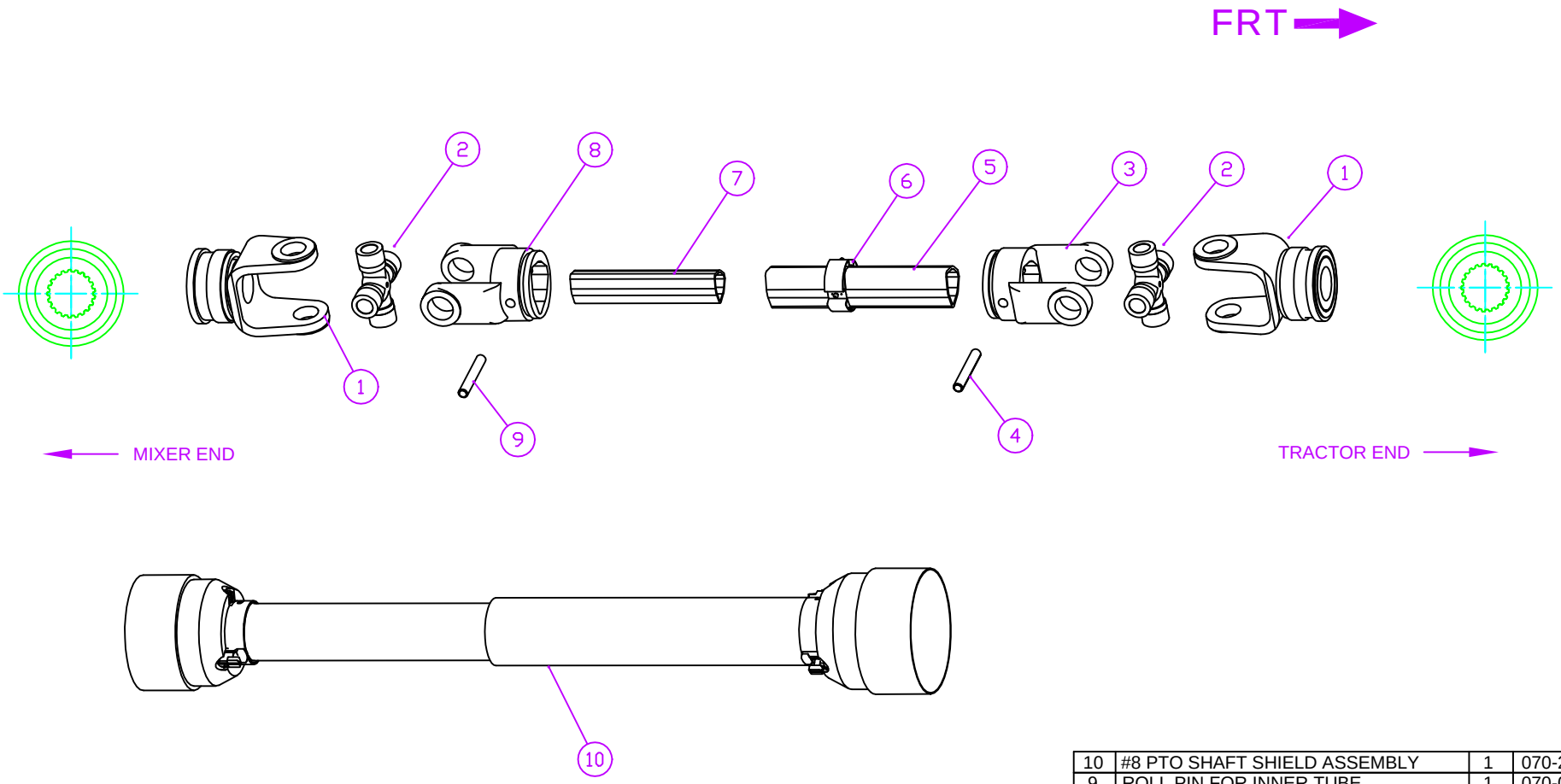

NO.	PART DESC.	QTY	PART NO.
10	#8 PTO SHAFT SHIELD ASSEMBLY	1	070-22-50
9	ROLL PIN FOR INNER TUBE	1	070-04-28
8	#8 YOKE, INNER TUBE, MIXER END	1	070-04-27
7	#8 PTO INNER TUBE (MIXER END)	1	070-04-26
6	BUSHING FOR OUTER TUBE	1	070-04-25
5	#8 PTO OUTER TUBE (TRACTOR END)	1	070-04-24
4	ROLL PIN FOR OUTER TUBE	1	070-04-04
3	#8 YOKE, OUTER TUBE, TRACTOR END	1	070-04-03
2	#8 CROSS (35.0mm X 106.5mm)	2	070-04-02
1	TRACTOR END YOKE (1-3/4",20-SPLINE)	2	070-04-01

PARTS LIST

DRAWN BY: D. RODGERS
DATE: DEC 19/00
MODEL: ALL APPLICABLE
SHEET: 1 of 1
PART/ASSEMBLY NO: 079-00-03

JAY•LOR Fabricating Inc

TITLE: #8 PTO SHAFT: 1-3/4", 20-SPLINE TRACTOR END, 1-3/4" 20-SPLINE MIXER END (1000 RPM)

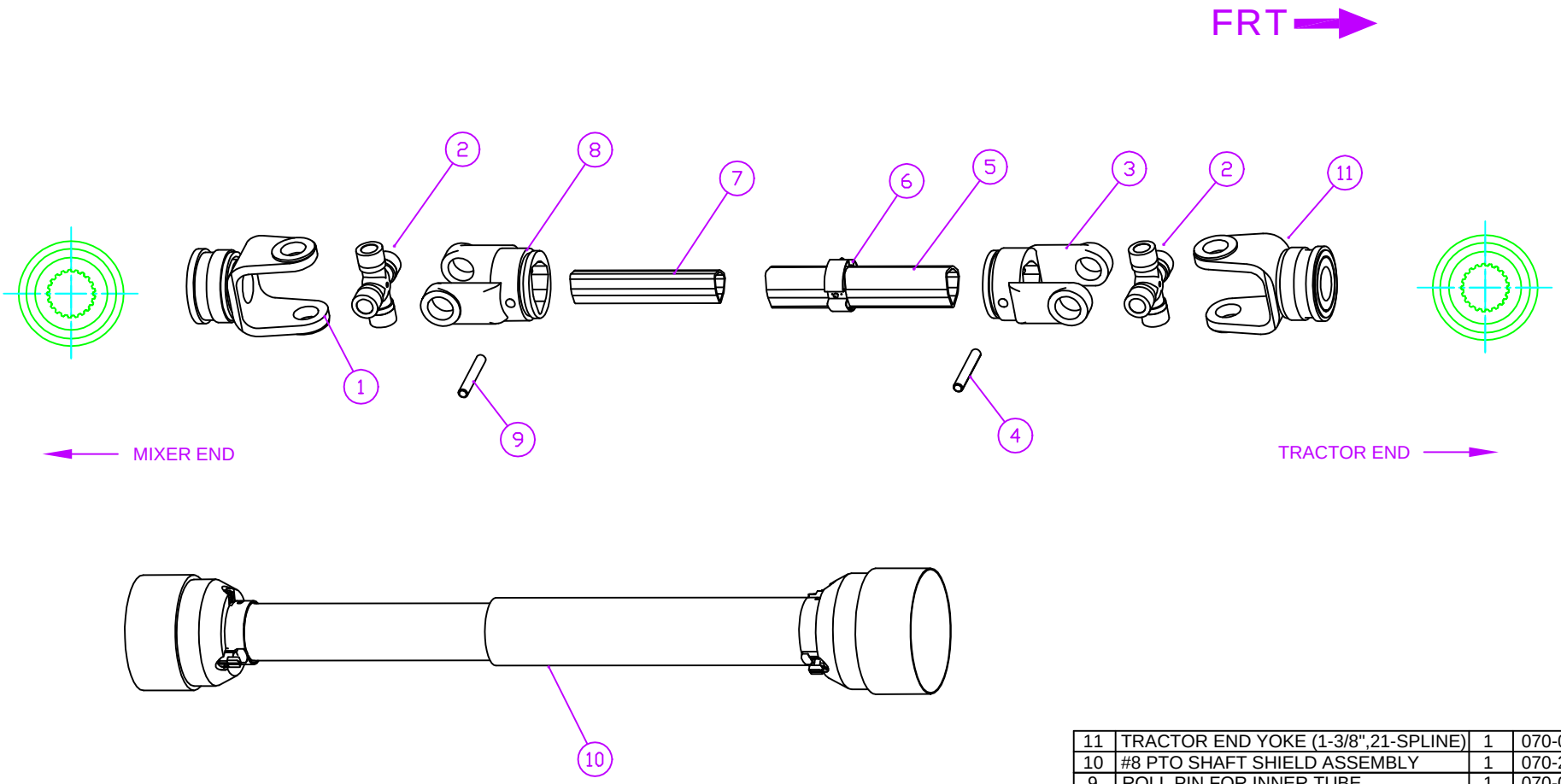

NO.	PART DESC.	QTY	PART NO.
11	TRACTOR END YOKE (1-3/8",21-SPLINE)	1	070-04-31
10	#8 PTO SHAFT SHIELD ASSEMBLY	1	070-22-50
9	ROLL PIN FOR INNER TUBE	1	070-04-28
8	#8 YOKE, INNER TUBE, MIXER END	1	070-04-27
7	#8 PTO INNER TUBE (MIXER END)	1	070-04-26
6	BUSHING FOR OUTER TUBE	1	070-04-25
5	#8 PTO OUTER TUBE (TRACTOR END)	1	070-04-24
4	ROLL PIN FOR OUTER TUBE	1	070-04-04
3	#8 YOKE, OUTER TUBE, TRACTOR END	1	070-04-03
2	#8 CROSS (35.0mm X 106.5mm)	2	070-04-02
1	TRACTOR END YOKE (1-3/4",20-SPLINE)	1	070-04-01

PARTS LIST

DRAWN BY: D. RODGERS | DATE: DEC 19/00

MODEL: ALL APPLICABLE | SHEET: 1 of 1

PART/ASSEMBLY NO: 079-00-04

JAY•LOR Fabricating Inc

TITLE: #8 PTO SHAFT: 1-3/8", 21-SPLINE TRACTOR END, 1-3/4" 20-SPLINE MIXER END (1000 RPM)

JAY•LOR®

Cutter • Mixer • Feeder

08 – LUBE SYSTEM

JAY-LOR® Fabricating Inc.
RR # 2 Orton, Ontario, Canada, L0N 1N0 Tel: (519) 787-9353 Fax: (519) 787-7053

* - MOUNTING BRACKET NOT INCLUDED W/ ASSEMBLY.

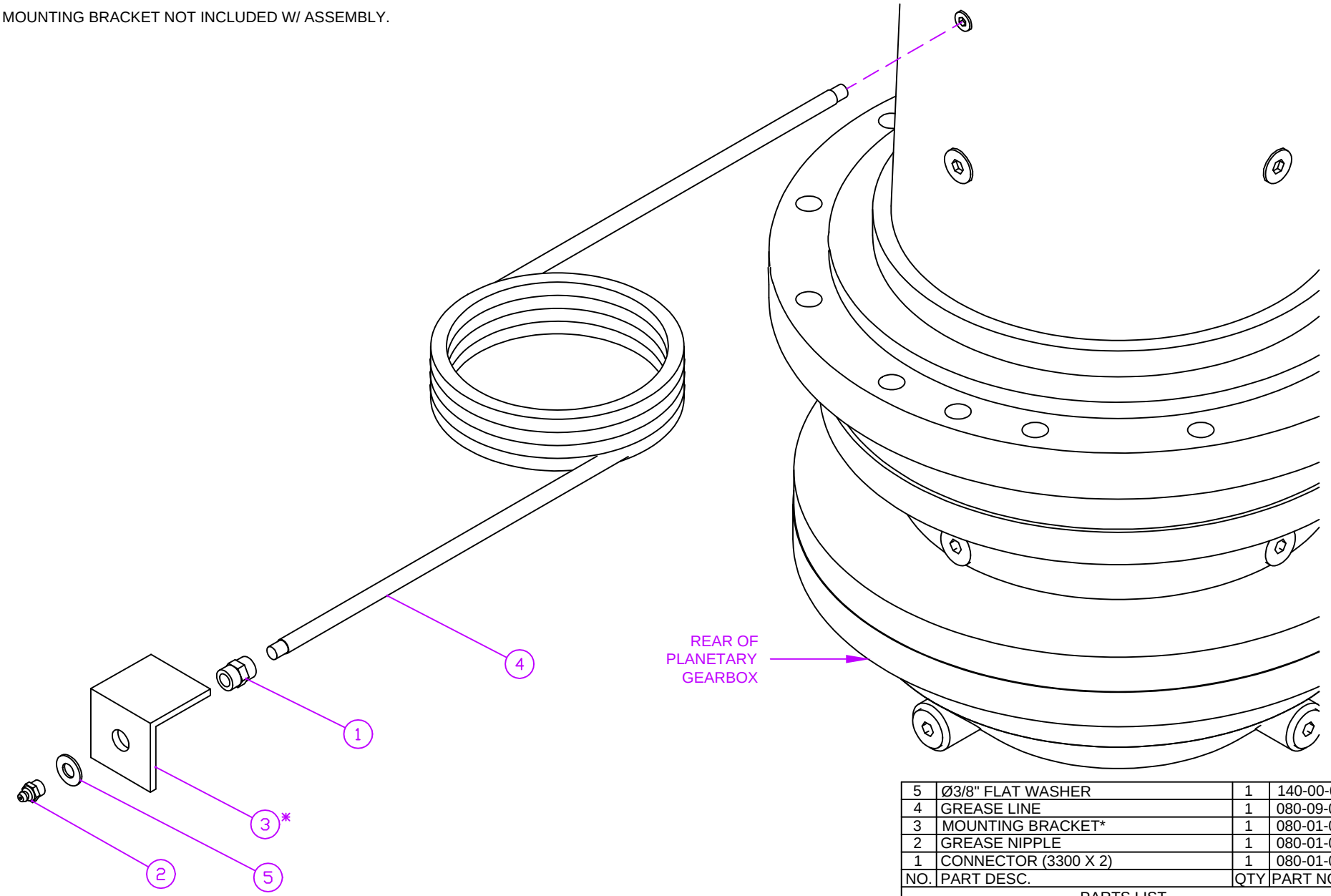

NO.	PART DESC.	QTY	PART NO.
5	Ø3/8" FLAT WASHER	1	140-00-66
4	GREASE LINE	1	080-09-01
3	MOUNTING BRACKET*	1	080-01-08
2	GREASE NIPPLE	1	080-01-06
1	CONNECTOR (3300 X 2)	1	080-01-05

PARTS LIST

DRAWN BY: D. RODGERS	DATE: DEC 18/00
MODEL: ALL APPLICABLE	SHEET: 1 of 1
PART/ASSEMBLY NO: 080-01-00	

JAY•LOR Fabricating Inc

TITLE: GREASE LINE ASSEMBLY FOR PGA 1802 VM PLANETARY GEARBOXES

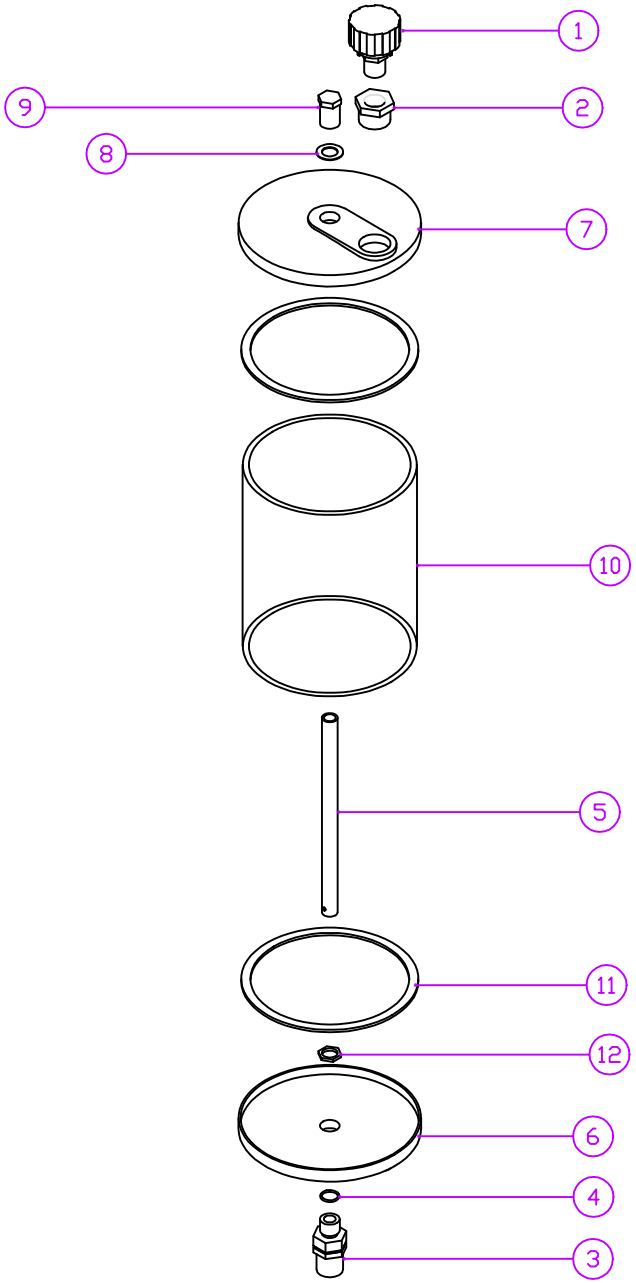

NO.	PART DESC.	QTY	PART NO.
12	RESERVOIR NUT	1	080-04-13
11	RUBBER GASKET	1	080-04-12
10	ACRYLIC RESERVOIR BODY	1	080-04-11
9	RESERVOIR CLOSURE	1	080-04-10
8	WASHER	1	080-04-09
7	RESERVOIR TOP PLATE	1	080-04-08
6	RESERVOIR BOTTOM PLATE	1	080-04-07
5	CONNECTING PIPE	1	080-04-06
4	O-RING FOR ALUMINUM SHANK	1	080-04-05
3	ALUMINUM SHANK	1	080-04-04
2	PLASTIC BUSHING	1	080-04-03
1	BREATHER CAP	1	080-04-02

PARTS LIST

DRAWN BY: D. RODGERS

DATE: MAY 19/00

MODEL: ALL APPLICABLE

SHEET: 1 of 1

PART/ASSEMBLY NO: 080-04-00

JAY•LOR Fabricating Inc

TITLE: 1/2 GALLON ACRYLIC RESERVOIR ASSEMBLY

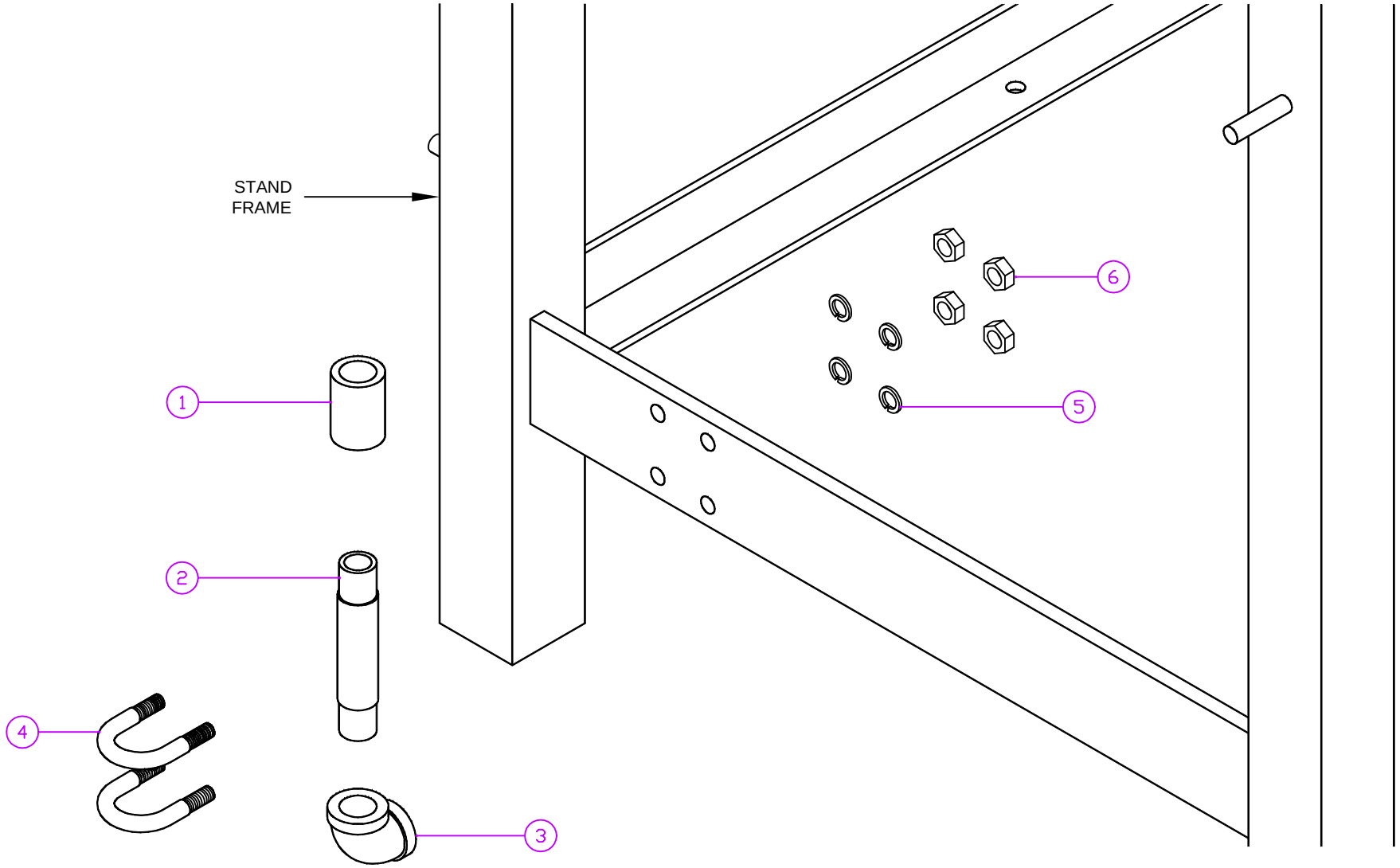

NO.	PART DESC.	QTY	PART NO.
6	Ø3/8" NUT	4	140-00-85
5	Ø3/8" LOCK WASHER	4	140-00-71
4	PIPE CLAMP	2	080-07-06
3	Ø1/2" NPT ELBOW	1	080-07-03
2	Ø1/2" NIPPLE	1	080-07-02
1	Ø1/2" COUPLING	1	080-07-01

PARTS LIST

DRAWN BY: D. RODGERS
DATE: MAY 23/00
MODEL: ALL APPLICABLE
SHEET: 1 of 1
PART/ASSEMBLY NO: 080-07-00

TITLE: ACRYLIC RESERVOIR MOUNTING ASSEMBLY

JAY•LOR Fabricating Inc

JAY•LOR®

Cutter • Mixer • Feeder

09 – HYDRAULICS

JAY-LOR® Fabricating Inc.
RR # 2 Orton, Ontario, Canada, L0N 1N0 Tel: (519) 787-9353 Fax: (519) 787-7053

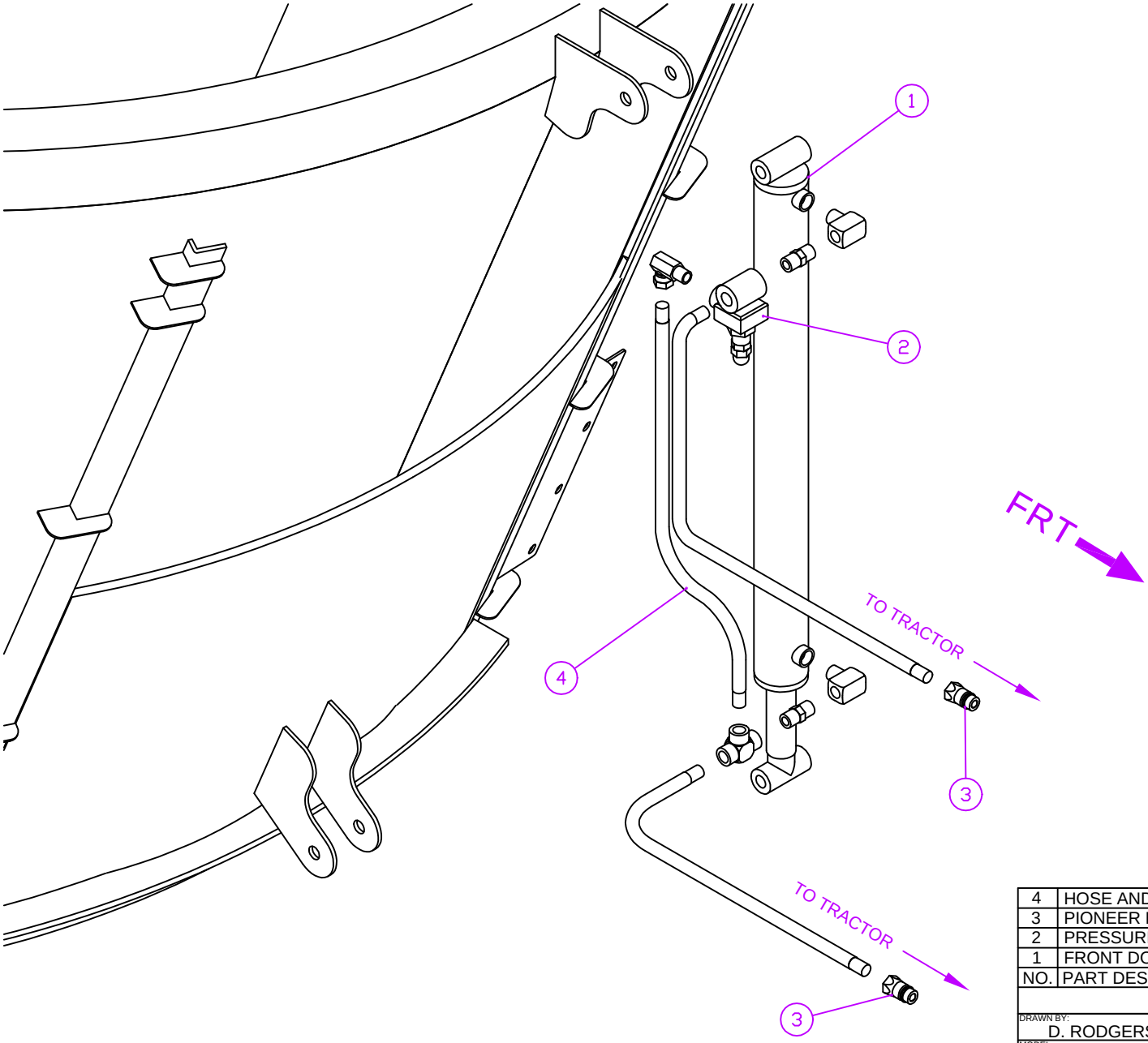

NO.	PART DESC.	QTY	PART NO.
4	HOSE AND FITTING ASSEMBLY	1	090-20-03
3	PIONEER ENDS	2	090-00-19
2	PRESSURE RELIEF VALVE	1	090-00-21
1	FRONT DOOR CYLINDER (66")	1	090-03-00

PARTS LIST

DRAWN BY: D. RODGERS
DATE: JUL 14/00
MODEL: ALL APPLICABLE
SHEET: 1 of 1
PART/ASSEMBLY NO: 090-20-00

JAY•LOR Fabricating Inc

TITLE: FRONT DISCHARGE DOOR HYDRAULIC ASSEMBLY W/ CYLINDER

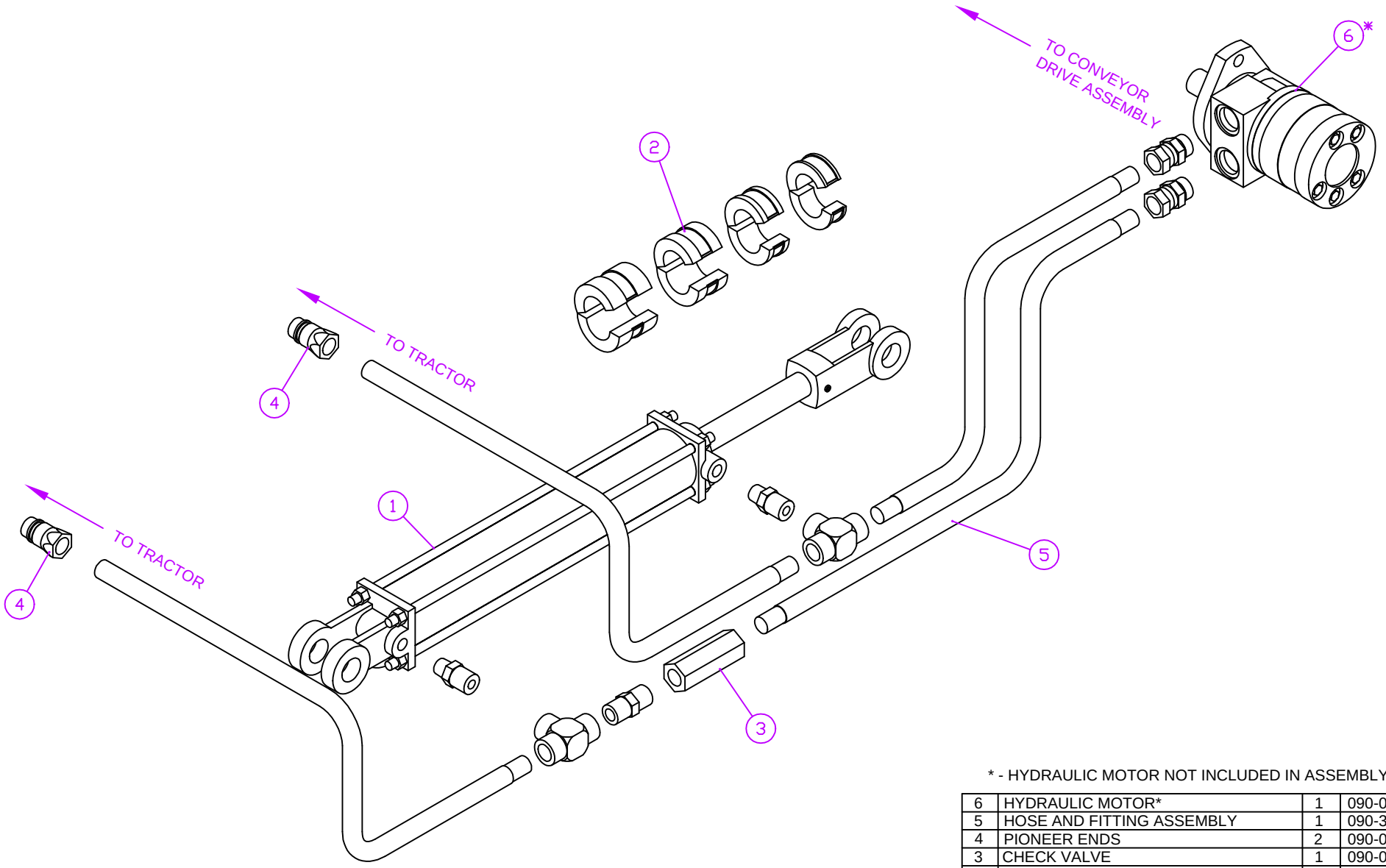

* - HYDRAULIC MOTOR NOT INCLUDED IN ASSEMBLY.

NO.	PART DESC.	QTY	PART NO.
6	HYDRAULIC MOTOR*	1	090-00-26
5	HOSE AND FITTING ASSEMBLY	1	090-30-03
4	PIONEER ENDS	2	090-00-19
3	CHECK VALVE	1	090-00-01
2	LOCK COLLAR KIT	1	090-00-60
1	12" LIFT CYLINDER	1	090-10-00

PARTS LIST

DRAWN BY: D. RODGERS
DATE: JUL 17/00
MODEL: ALL APPLICABLE
SHEET: 1 of 1
PART/ASSEMBLY NO: 090-30-00

JAY•LOR Fabricating Inc

TITLE: 6' CONVEYOR W/ 41" WING EXTENSION HYDRAULIC ASSEMBLY W/ CYLINDER AND LOCK COLLARS

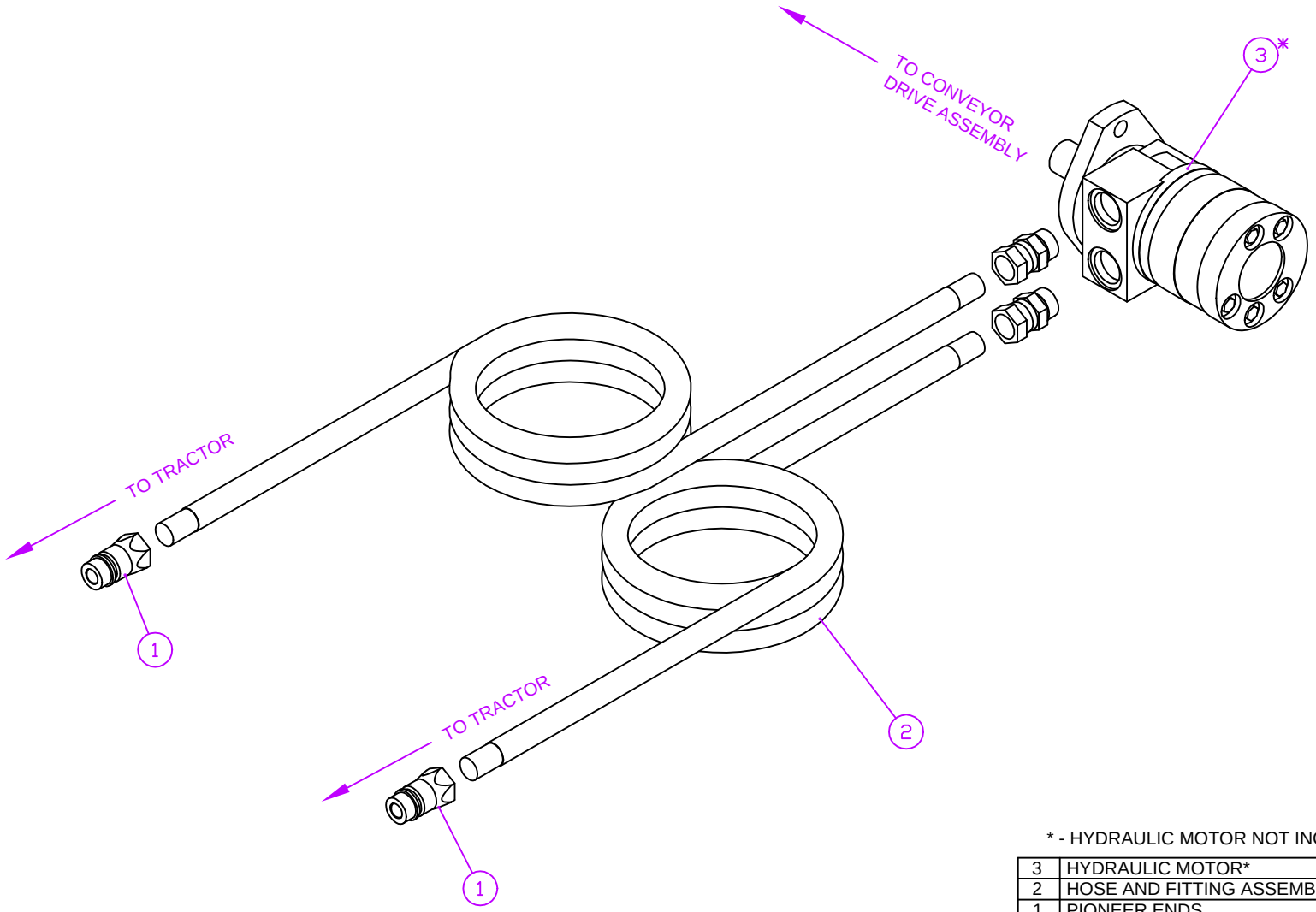

* - HYDRAULIC MOTOR NOT INCLUDED IN ASSEMBLY

NO.	PART DESC.	QTY	PART NO.
3	HYDRAULIC MOTOR*	1	090-00-26
2	HOSE AND FITTING ASSEMBLY	1	090-32-03
1	PIONEER ENDS	2	090-00-19

PARTS LIST

DRAWN BY: D. RODGERS	DATE: JUL 17/00
MODEL: ALL APPLICABLE	SHEET: 1 of 1
PART/ASSEMBLY NO: 090-32-00	

JAY•LOR Fabricating Inc

TITLE: HYDRAULIC ASSEMBLY FOR 8'/9'2" DUAL CONVEYORS, AND 6' CONVEYOR W/ 41" WING EXTENSION (MANUAL LIFT)

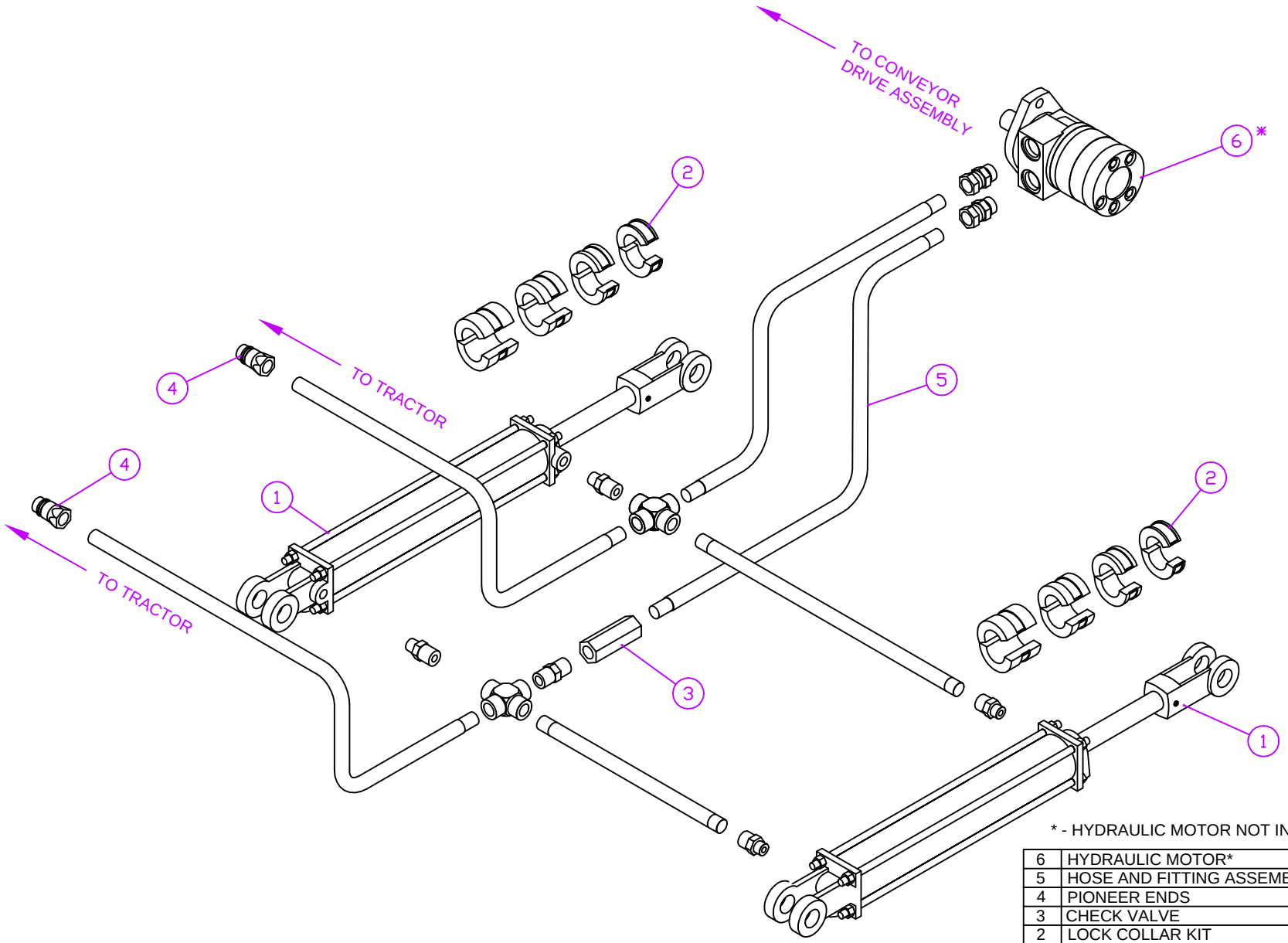

* - HYDRAULIC MOTOR NOT INCLUDED IN ASSEMBLY.

NO.	PART DESC.	QTY	PART NO.
6	HYDRAULIC MOTOR*	1	090-00-26
5	HOSE AND FITTING ASSEMBLY	1	090-34-03
4	PIONEER ENDS	3	090-00-19
3	CHECK VALVE	1	090-00-01
2	LOCK COLLAR KIT	2	090-00-60
1	12" LIFT CYLINDER	2	090-10-00

PARTS LIST

DRAWN BY: D. RODGERS
DATE: JUL 17/00
MODEL: ALL APPLICABLE
SHEET: 1 of 1
PART/ASSEMBLY NO: 090-34-00

JAY•LOR Fabricating Inc

TITLE: 6' CONVEYOR W/ 60" WING EXTENSION HYDRAULIC ASSEMBLY W/ CYLINDERS AND LOCK COLLARS

JAY•LOR®

Cutter • Mixer • Feeder

10 – SCALES

JAY-LOR® Fabricating Inc.
RR # 2 Orton, Ontario, Canada, L0N 1N0 Tel: (519) 787-9353 Fax: (519) 787-7053

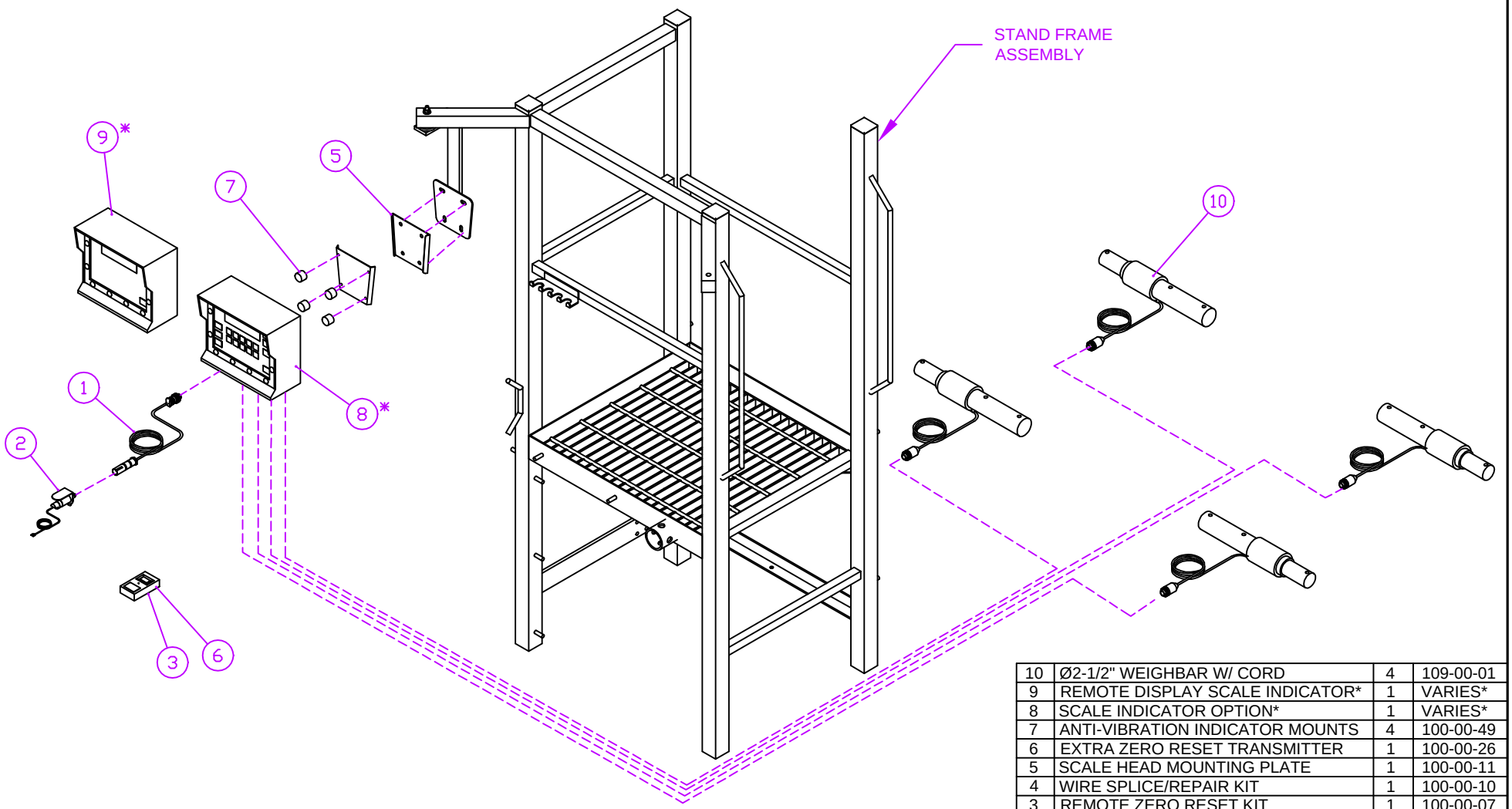

NO.	PART DESC.	QTY	PART NO.
10	Ø2-1/2" WEIGHBAR W/ CORD	4	109-00-01
9	REMOTE DISPLAY SCALE INDICATOR*	1	VARIES*
8	SCALE INDICATOR OPTION*	1	VARIES*
7	ANTI-VIBRATION INDICATOR MOUNTS	4	100-00-49
6	EXTRA ZERO RESET TRANSMITTER	1	100-00-26
5	SCALE HEAD MOUNTING PLATE	1	100-00-11
4	WIRE SPLICE/REPAIR KIT	1	100-00-10
3	REMOTE ZERO RESET KIT	1	100-00-07
2	TRACTOR PLUG ASSEMBLY	1	100-00-02
1	SCALE POWER CORD (18' OVERALL)	1	100-00-01

PARTS LIST

* - SCALE INDICATOR MODELS VARY W/ OPTIONS SELECTED FOR YOUR JAY-LOR PRODUCT.

DRAWN BY: D. RODGERS	DATE: DEC 18/00
MODEL: 2725	SHEET: 1 of 1
PART/ASSEMBLY NO: 109-00-00	

TITLE: TYPICAL SCALE SYSTEM PACKAGE FOR MODEL 2725

JAY•LOR Fabricating Inc

JAY•LOR®

Cutter • Mixer • Feeder

11 – SHIELDS

JAY-LOR® Fabricating Inc.
RR # 2 Orton, Ontario, Canada, L0N 1N0 Tel: (519) 787-9353 Fax: (519) 787-7053

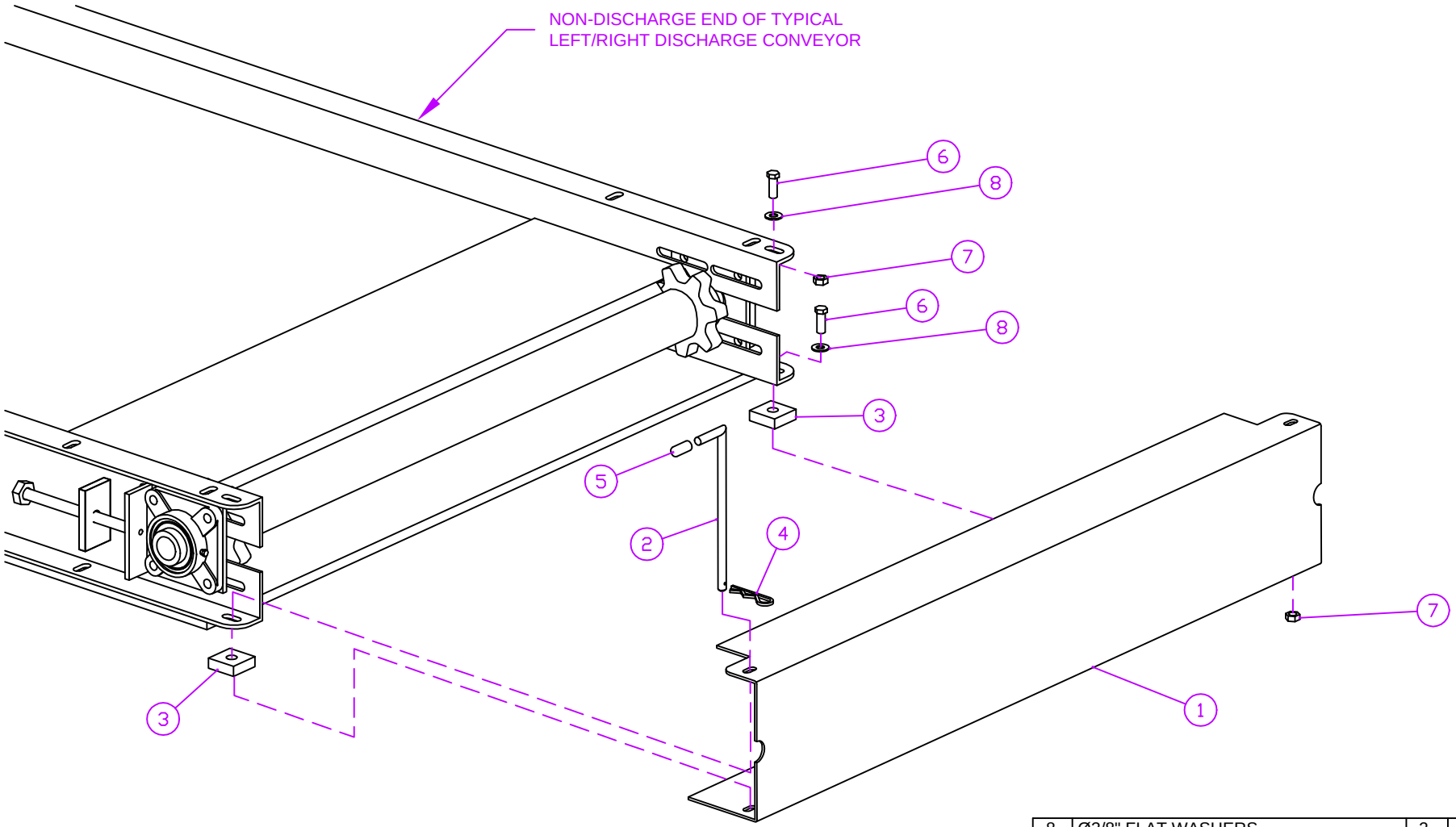

NO.	PART DESC.	QTY	PART NO.
8	Ø3/8" FLAT WASHERS	2	140-00-66
7	Ø3/8" HINGE LOCKNUTS	2	140-00-78
6	Ø3/8" X 1" HINGE BOLTS	2	140-00-12
5	CONVEYOR BOOT PIN CAP	1	150-00-01
4	HAIR PIN	1	010-01-07
3	PLASTIC SPACER BLOCK	2	110-00-35
2	CONVEYOR BOOT PIN	1	110-04-03
1	CONVEYOR BOOT SHIELD	1	110-04-01

PARTS LIST

DRAWN BY: D. RODGERS
DATE: MAY 31/00
MODEL: ALL APPLICABLE
SHEET: 1 of 1
PART/ASSEMBLY NO: 110-04-00

TITLE: CONVEYOR CLEANOUT BOOT ASSEMBLY - FOR USE ON LEFT/RIGHT DISCHARGE DIRECTION CONVEYORS

JAY•LOR Fabricating Inc

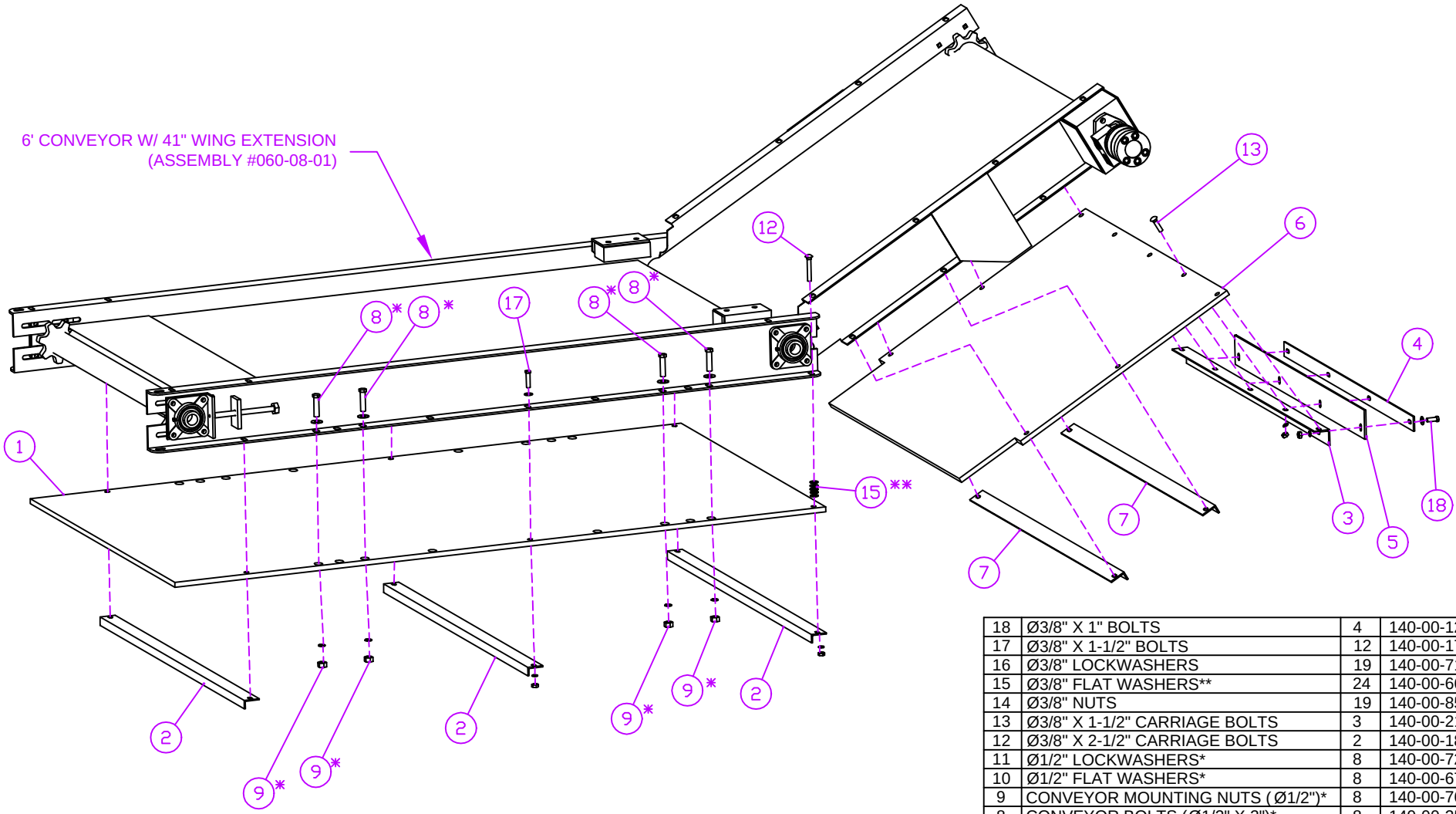

NO.	PART DESC.	QTY	PART NO.
18	Ø3/8" X 1" BOLTS	4	140-00-12
17	Ø3/8" X 1-1/2" BOLTS	12	140-00-17
16	Ø3/8" LOCKWASHERS	19	140-00-71
15	Ø3/8" FLAT WASHERS**	24	140-00-66
14	Ø3/8" NUTS	19	140-00-85
13	Ø3/8" X 1-1/2" CARRIAGE BOLTS	3	140-00-21
12	Ø3/8" X 2-1/2" CARRIAGE BOLTS	2	140-00-18
11	Ø1/2" LOCKWASHERS*	8	140-00-72
10	Ø1/2" FLAT WASHERS*	8	140-00-67
9	CONVEYOR MOUNTING NUTS (Ø1/2")*	8	140-00-76
8	CONVEYOR BOLTS (Ø1/2" X 2")*	8	140-00-25
7	SUPPORT ANGLE	2	110-00-36
6	41" EXTENSION PLASTIC SHIELD	1	110-00-34
5	RUBBER FLAP	1	110-00-08
4	RUBBER FLAP RETAINER	1	110-00-07
3	RUBBER/PLASTIC SUPPORT ANGLE	1	110-00-05
2	SUPPORT ANGLE	3	110-00-03
1	6' CONVEYOR PLASTIC SHIELD	1	110-00-02

PARTS LIST

* - USED FOR MOUNTING CONVEYOR ASSEMBLY TO TYPICAL JAY-LOR FRAME UNIT.
** - STACK 5 FLAT WASHERS EACH SIDE AS SPACER FOR WING EXTENSION MOVEMENT.

DRAWN BY: D. RODGERS
DATE: MAY 31/00
MODEL: ALL APPLICABLE
SHEET: 1 of 1
PART/ASSEMBLY NO: 110-10-01

JAY•LOR Fabricating Inc

TITLE: LOWER SHIELD ASSEMBLY FOR 6' CONVEYOR W/ 41" WING EXTENSION (ASSEMBLY #060-08-01)

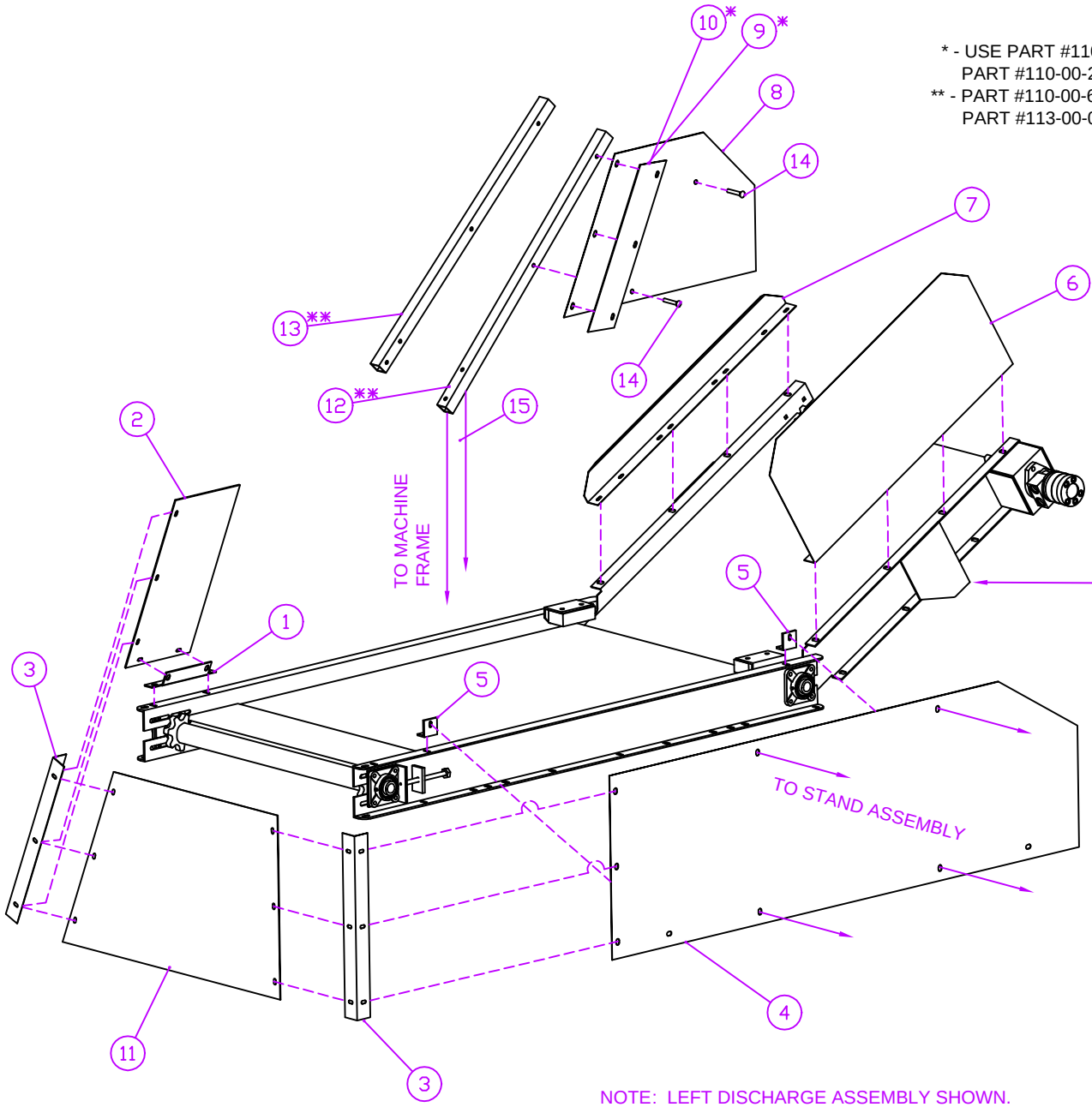

* - USE PART #110-00-27 FOR LEFT DISCHARGE DIRECTION UNITS. USE PART #110-00-28 FOR RIGHT DISCHARGE DIRECTION UNITS.

** - PART #110-00-62 APPLIES TO ALL MODELS EXCEPT MODEL 2350. USE PART #113-00-01 FOR MODEL 2350.

NOTE: LEFT DISCHARGE ASSEMBLY SHOWN.

NO.	PART DESC.	QTY	PART NO.
19	Ø3/8" LOCKWASHERS	39	140-00-71
18	Ø3/8" FLAT WASHERS	39	140-00-66
17	Ø3/8" NUTS	39	140-00-85
16	Ø3/8" X 1" BOLTS	31	140-00-12
15	Ø3/8" X 2-1/2" BOLTS	2	140-00-14
14	Ø3/8" X 2-1/2" CARRIAGE BOLTS	2	140-00-18
13	WING SHIELD SUPPORT TUBE**	1	113-00-01
12	WING SHIELD SUPPORT TUBE**	1	110-00-62
11	CONVEYOR END SHIELD	1	110-00-61
10	RIGHT RUBBER SHIELD (WING END)*	1	110-00-28
9	LEFT RUBBER SHIELD (WING END)*	1	110-00-27
8	DRUM SIDE SHIELD (WING END)	1	110-00-26
7	WING SHIELD (DRUM SIDE)	1	110-00-24
6	WING SHIELD (STAND SIDE)	1	110-00-22
5	SHIELD SUPPORT CLIP	2	110-00-21
4	FRONT SHIELD (STAND SIDE)	1	110-00-17
3	SHIELD CORNER ANGLES	2	110-00-16
2	DRUM SIDE SHIELD	1	110-00-14
1	SHIELD MOUNT SUPPORT BRACKET	1	110-00-13

PARTS LIST

DRAWN BY: D. RODGERS	DATE: JUN 2/00
MODEL: ALL APPLICABLE	SHEET: 1 of 1
PART/ASSEMBLY NO: 110-11-01	

TITLE: TOP SHIELD ASSEMBLY FOR 6' CONVEYOR W/ 41" WING EXTENSION (ASSEMBLY #060-08-01)

JAY•LOR Fabricating Inc

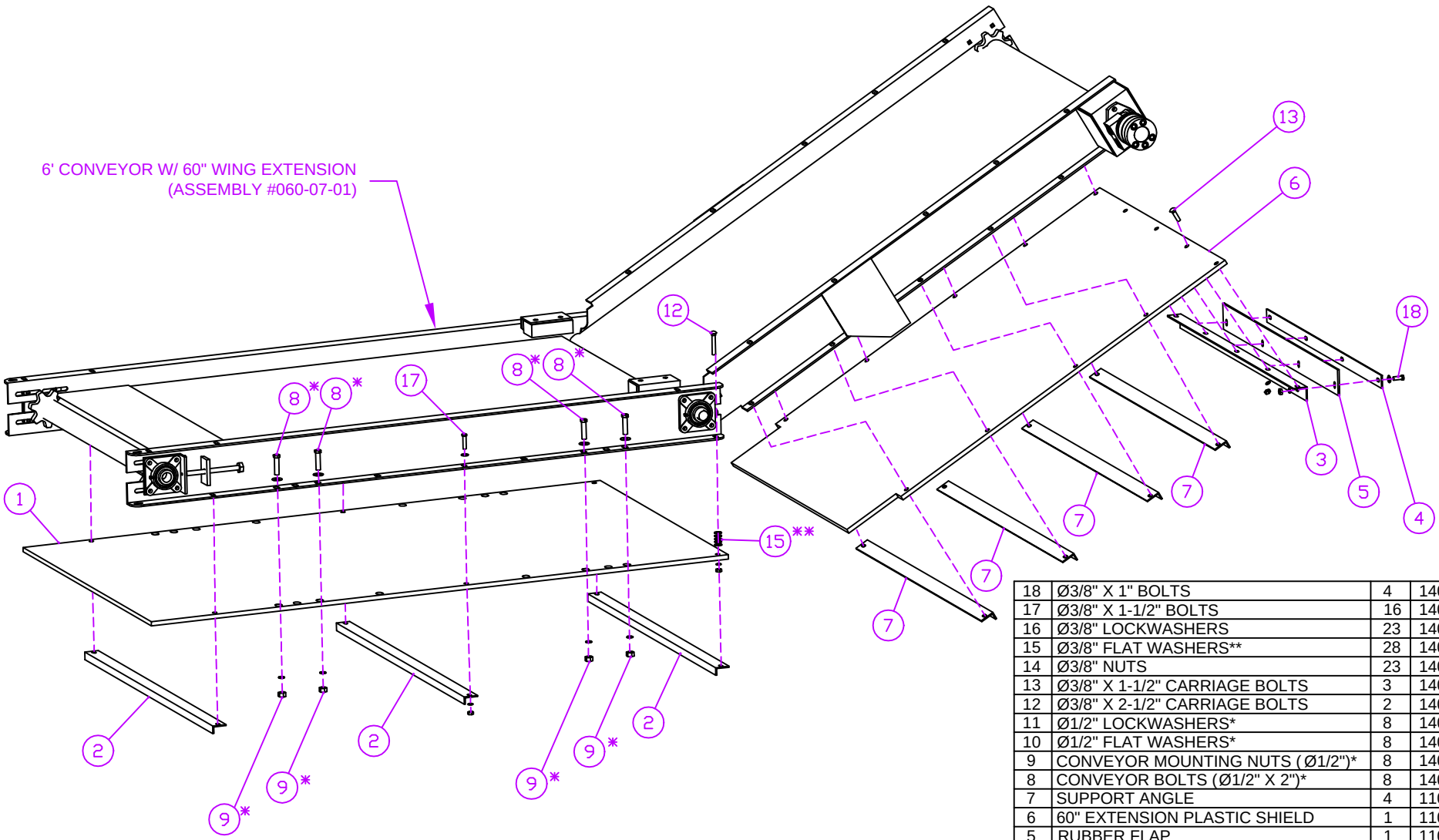

NO.	PART DESC.	QTY	PART NO.
18	Ø3/8" X 1" BOLTS	4	140-00-12
17	Ø3/8" X 1-1/2" BOLTS	16	140-00-17
16	Ø3/8" LOCKWASHERS	23	140-00-71
15	Ø3/8" FLAT WASHERS**	28	140-00-66
14	Ø3/8" NUTS	23	140-00-85
13	Ø3/8" X 1-1/2" CARRIAGE BOLTS	3	140-00-21
12	Ø3/8" X 2-1/2" CARRIAGE BOLTS	2	140-00-18
11	Ø1/2" LOCKWASHERS*	8	140-00-72
10	Ø1/2" FLAT WASHERS*	8	140-00-67
9	CONVEYOR MOUNTING NUTS (Ø1/2")*	8	140-00-76
8	CONVEYOR BOLTS (Ø1/2" X 2")*	8	140-00-25
7	SUPPORT ANGLE	4	110-00-36
6	60" EXTENSION PLASTIC SHIELD	1	110-00-60
5	RUBBER FLAP	1	110-00-08
4	RUBBER FLAP RETAINER	1	110-00-07
3	RUBBER/PLASTIC SUPPORT ANGLE	1	110-00-05
2	SUPPORT ANGLE	3	110-00-03
1	6' CONVEYOR PLASTIC SHIELD	1	110-00-02

PARTS LIST

* - USED FOR MOUNTING CONVEYOR ASSEMBLY TO TYPICAL JAY-LOR FRAME UNIT.
** - STACK 5 FLAT WASHERS EACH SIDE AS SPACER FOR WING EXTENSION MOVEMENT.

DRAWN BY: D. RODGERS
DATE: MAY 31/00
MODEL: ALL APPLICABLE
SHEET: 1 of 1
PART/ASSEMBLY NO: 110-10-02

TITLE: LOWER SHIELD ASSEMBLY FOR 6' CONVEYOR W/ 60" WING EXTENSION (ASSEMBLY #060-07-01)

JAY•LOR Fabricating Inc

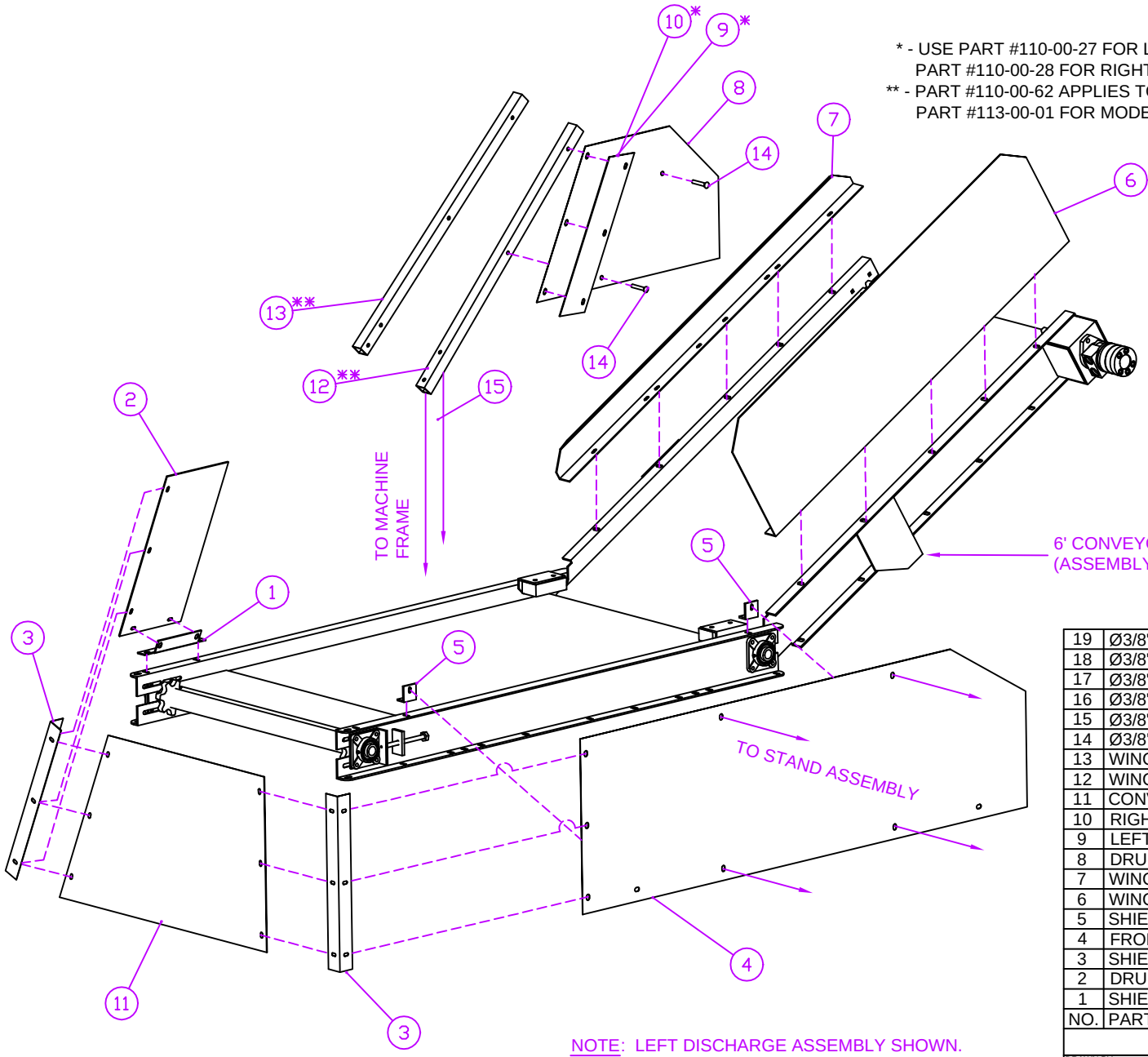

* - USE PART #110-00-27 FOR LEFT DISCHARGE DIRECTION UNITS. USE PART #110-00-28 FOR RIGHT DISCHARGE DIRECTION UNITS.

** - PART #110-00-62 APPLIES TO ALL MODELS EXCEPT MODEL 2350. USE PART #113-00-01 FOR MODEL 2350.

NOTE: LEFT DISCHARGE ASSEMBLY SHOWN.

NO.	PART DESC.	QTY	PART NO.
19	Ø3/8" LOCKWASHERS	42	140-00-71
18	Ø3/8" FLAT WASHERS	42	140-00-66
17	Ø3/8" NUTS	42	140-00-85
16	Ø3/8" X 1" BOLTS	33	140-00-12
15	Ø3/8" X 2-1/2" BOLTS	2	140-00-14
14	Ø3/8" X 2-1/2" CARRIAGE BOLTS	2	140-00-18
13	WING SHIELD SUPPORT TUBE**	1	113-00-01
12	WING SHIELD SUPPORT TUBE**	1	110-00-62
11	CONVEYOR END SHIELD	1	110-00-61
10	RIGHT RUBBER SHIELD (WING END)*	1	110-00-28
9	LEFT RUBBER SHIELD (WING END)*	1	110-00-27
8	DRUM SIDE SHIELD (WING END)	1	110-00-26
7	WING SHIELD (DRUM SIDE)	1	110-00-25
6	WING SHIELD (STAND SIDE)	1	110-00-23
5	SHIELD SUPPORT CLIP	2	110-00-21
4	FRONT SHIELD (STAND SIDE)	1	110-00-17
3	SHIELD CORNER ANGLES	2	110-00-16
2	DRUM SIDE SHIELD	1	110-00-14
1	SHIELD MOUNT SUPPORT BRACKET	1	110-00-13

PARTS LIST

DRAWN BY: D. RODGERS | DATE: JUN 2/00

MODEL: ALL APPLICABLE | SHEET: 1 of 1

PART/ASSEMBLY NO: 110-11-02

JAY•LOR Fabricating Inc

TITLE: TOP SHIELD ASSEMBLY FOR 6' CONVEYOR W/ 60" WING EXTENSION (ASSEMBLY #060-07-01)

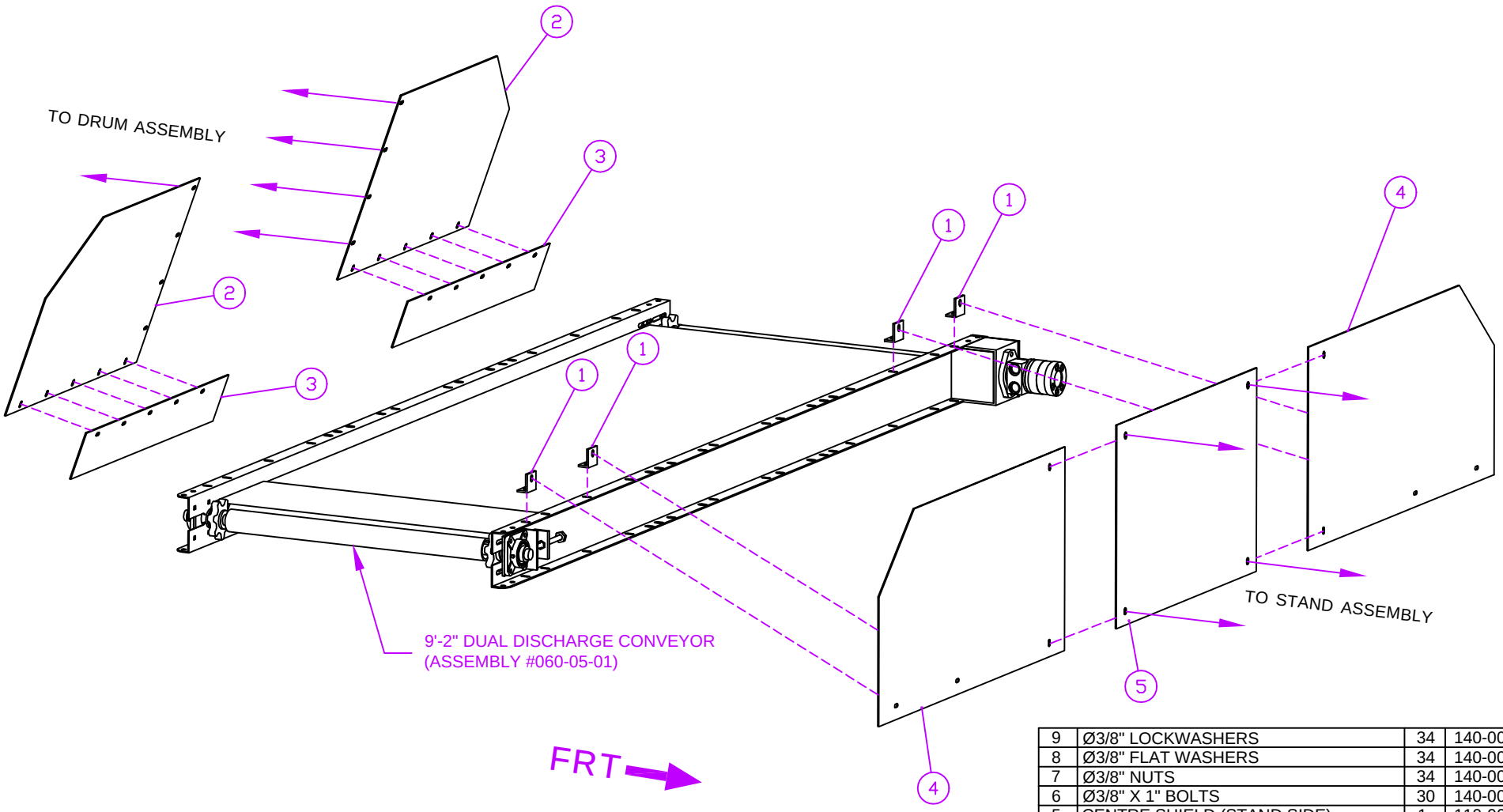

NO.	PART DESC.	QTY	PART NO.
9	Ø3/8" LOCKWASHERS	34	140-00-71
8	Ø3/8" FLAT WASHERS	34	140-00-66
7	Ø3/8" NUTS	34	140-00-85
6	Ø3/8" X 1" BOLTS	30	140-00-12
5	CENTRE SHIELD (STAND SIDE)	1	110-00-41
4	END SHIELDS (STAND SIDE)	2	110-00-40
3	RUBBER GUARD	2	110-00-38
2	DRUM SIDE SHIELD	2	110-00-30
1	SHIELD SUPPORT CLIP	4	110-00-21

PARTS LIST

DRAWN BY: D. RODGERS
DATE: JUN 9/00
MODEL: ALL APPLICABLE
SHEET: 1 of 1
PART/ASSEMBLY NO: 110-12-01

JAY•LOR Fabricating Inc

TITLE: TOP SHIELD ASSEMBLY FOR 9'-2" DUAL DIRECTION DISCHARGE CONVEYOR (ASSEMBLY #060-05-01)

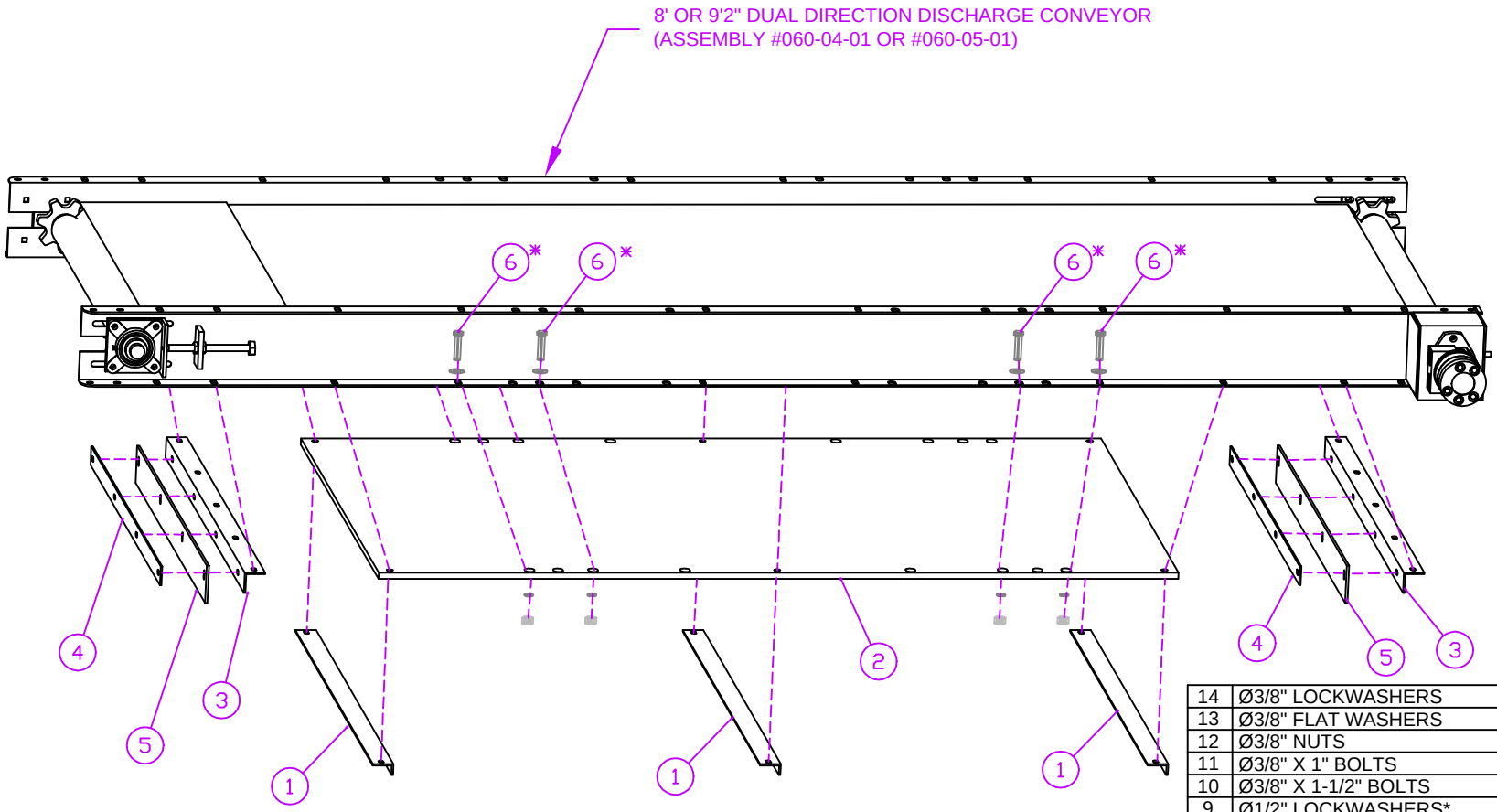

* - USED FOR MOUNTING CONVEYOR ASSEMBLY TO TYPICAL JAY-LOR FRAME UNIT.

NO.	PART DESC.	QTY	PART NO.
14	Ø3/8" LOCKWASHERS	18	140-00-71
13	Ø3/8" FLAT WASHERS	18	140-00-66
12	Ø3/8" NUTS	18	140-00-85
11	Ø3/8" X 1" BOLTS	12	140-00-12
10	Ø3/8" X 1-1/2" BOLTS	6	140-00-17
9	Ø1/2" LOCKWASHERS*	8	140-00-72
8	Ø1/2" FLAT WASHERS*	8	140-00-67
7	CONVEYOR MOUNTING NUTS (Ø1/2")*	8	140-00-76
6	CONVEYOR BOLTS (Ø1/2" X 2")*	8	140-00-25
5	RUBBER FLAP	2	110-00-08
4	RUBBER FLAP RETAINER	2	110-00-07
3	RUBBER/PLASTIC SUPPORT ANGLE	2	110-00-06
2	PLASTIC SHIELD	1	110-00-11
1	SHIELD SUPPORT ANGLE	3	110-00-03

PARTS LIST

DRAWN BY: D. RODGERS
DATE: JUN 9/00
MODEL: ALL APPLICABLE
SHEET: 1 of 1
PART/ASSEMBLY NO: 110-13-01

TITLE: LOWER SHIELD ASSEMBLY FOR 8' AND 9'-2" DUAL DISCHARGE CONVEYORS (ASSEMBLIES #060-04-01 AND #060-05-01)

JAY•LOR Fabricating Inc

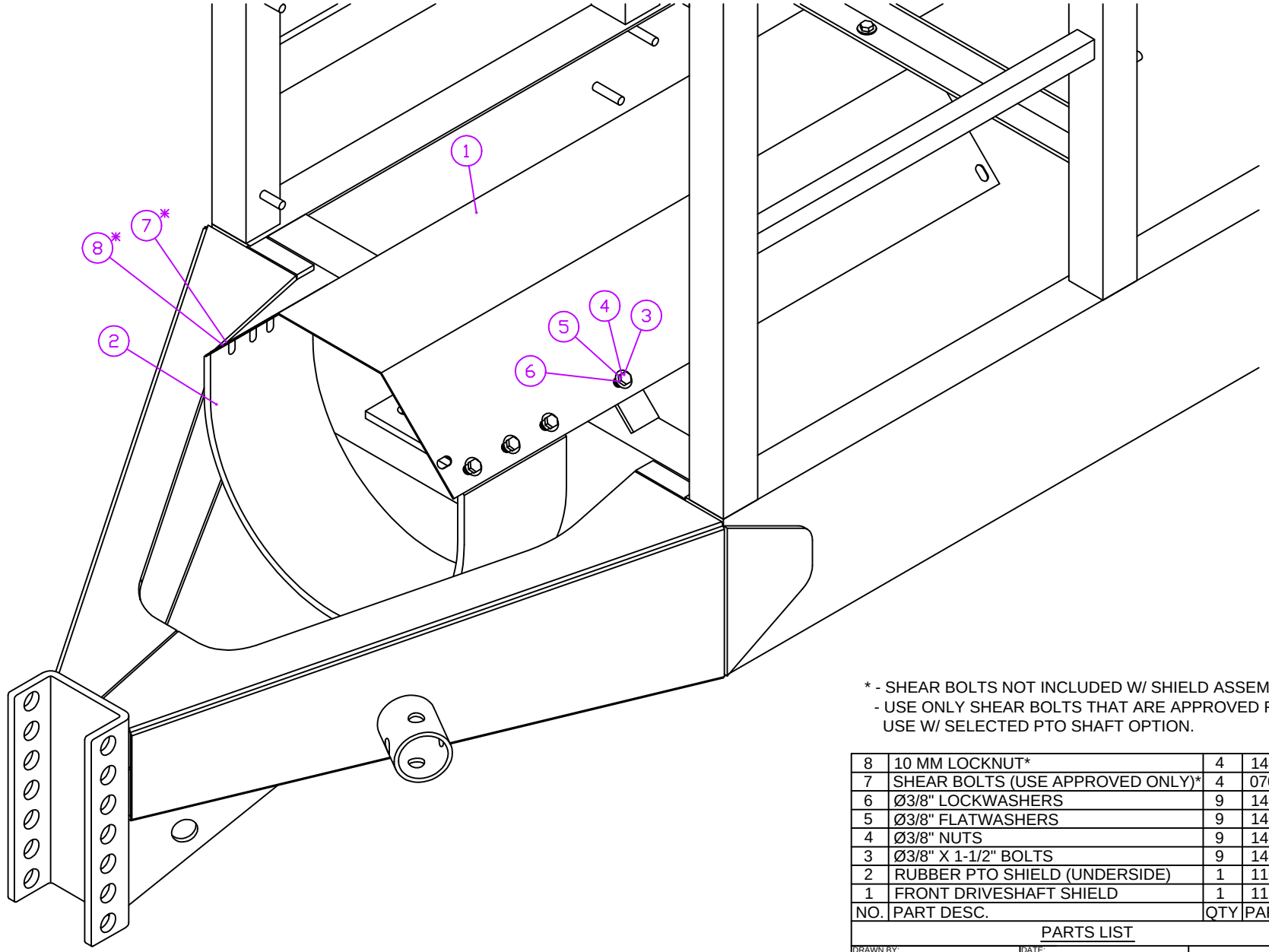

* - SHEAR BOLTS NOT INCLUDED W/ SHIELD ASSEMBLY.
- USE ONLY SHEAR BOLTS THAT ARE APPROVED FOR USE W/ SELECTED PTO SHAFT OPTION.

NO.	PART DESC.	QTY	PART NO.
8	10 MM LOCKNUT*	4	140-00-86
7	SHEAR BOLTS (USE APPROVED ONLY)*	4	070-00-82
6	Ø3/8" LOCKWASHERS	9	140-00-71
5	Ø3/8" FLATWASHERS	9	140-00-66
4	Ø3/8" NUTS	9	140-00-85
3	Ø3/8" X 1-1/2" BOLTS	9	140-00-17
2	RUBBER PTO SHIELD (UNDERSIDE)	1	110-00-54
1	FRONT DRIVESHAFT SHIELD	1	117-00-02

PARTS LIST

DRAWN BY: D. RODGERS
DATE: AUG 17/00
MODEL: 2725
SHEET: 1 of 1
PART/ASSEMBLY NO: 119-05-01

TITLE: STANDARD DRIVELINE SHIELD PACKAGE FOR MODEL 2725 W/ FRONT DOOR DISCHARGE

JAY•LOR Fabricating Inc

JAY•LOR®

Cutter • Mixer • Feeder

12 – DECALS

JAY-LOR® Fabricating Inc.
RR # 2 Orton, Ontario, Canada, L0N 1N0 Tel: (519) 787-9353 Fax: (519) 787-7053

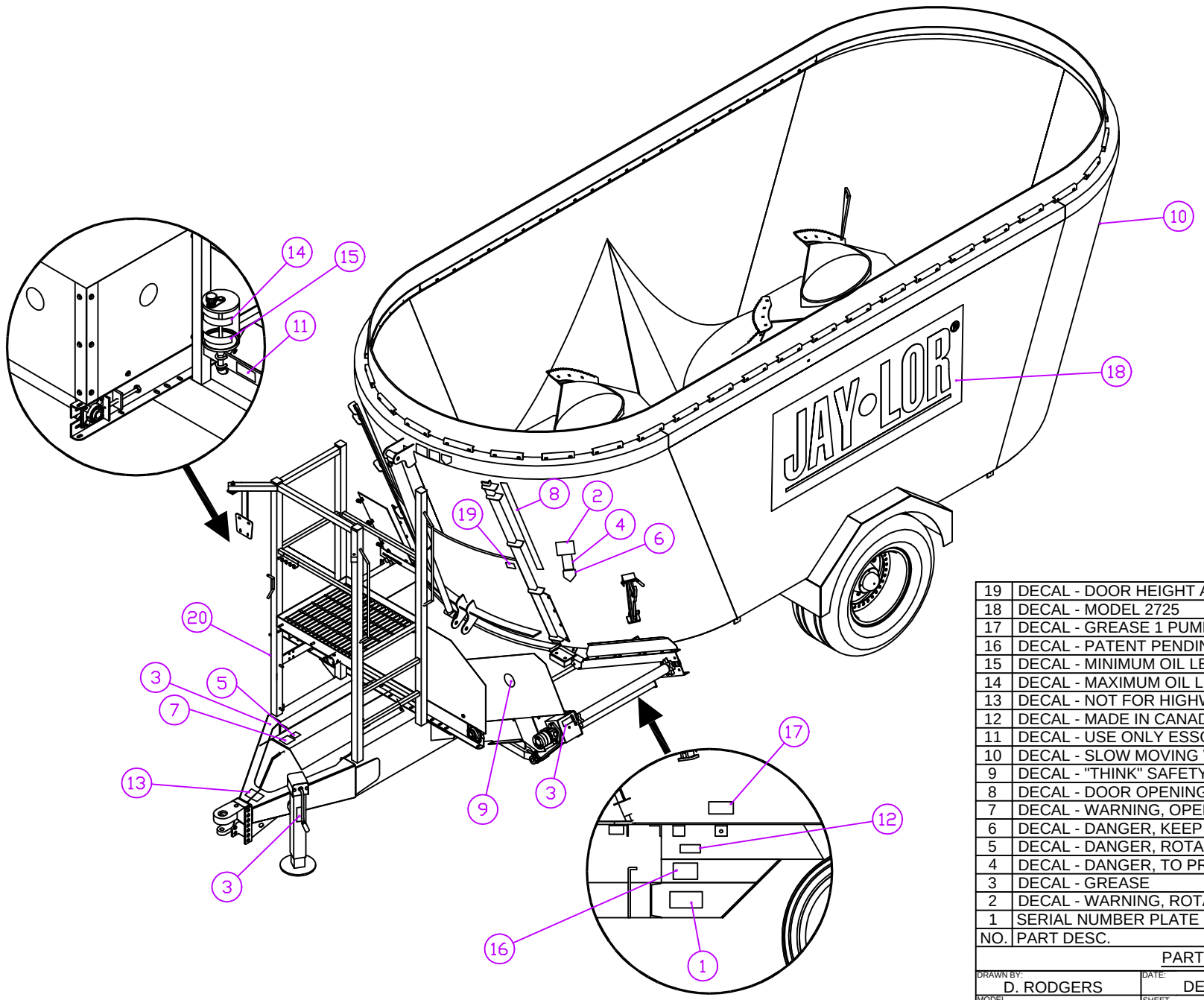

NO.	PART DESC.	QTY	PART NO.
19	DECAL - DOOR HEIGHT ARROW	2	120-00-34
18	DECAL - MODEL 2725	2	120-00-48
17	DECAL - GREASE 1 PUMP EVERY 8...	2	120-00-32
16	DECAL - PATENT PENDING	1	120-00-31
15	DECAL - MINIMUM OIL LEVEL	2	120-00-29
14	DECAL - MAXIMUM OIL LEVEL	2	120-00-28
13	DECAL - NOT FOR HIGHWAY TRAVEL...	1	120-00-24
12	DECAL - MADE IN CANADA	1	120-00-22
11	DECAL - USE ONLY ESSO OR MOBIL...	1	120-00-21
10	DECAL - SLOW MOVING VEHICLE	1	120-00-15
9	DECAL - "THINK" SAFETY	3	120-00-14
8	DECAL - DOOR OPENING MEASURE	2	120-00-13
7	DECAL - WARNING, OPERATE AT 1000...	1	120-00-20
6	DECAL - DANGER, KEEP CHILDREN...	3	120-00-11
5	DECAL - DANGER, ROTATING...	1	120-00-09
4	DECAL - DANGER, TO PREVENT...	3	120-00-08
3	DECAL - GREASE	3	120-00-07
2	DECAL - WARNING, ROTATING KNIVES	3	120-00-06
1	SERIAL NUMBER PLATE	1	120-00-05

PARTS LIST

DRAWN BY: D. RODGERS
DATE: DEC 18/00
MODEL: 2725
SHEET: 1 of 1
PART/ASSEMBLY NO: 129-05-05

JAY•LOR Fabricating Inc

TITLE: COMPLETE DECAL PACKAGE FOR MODEL 2725 W/ FRONT DOOR DISCHARGE AND STANDARD DRIVELINE

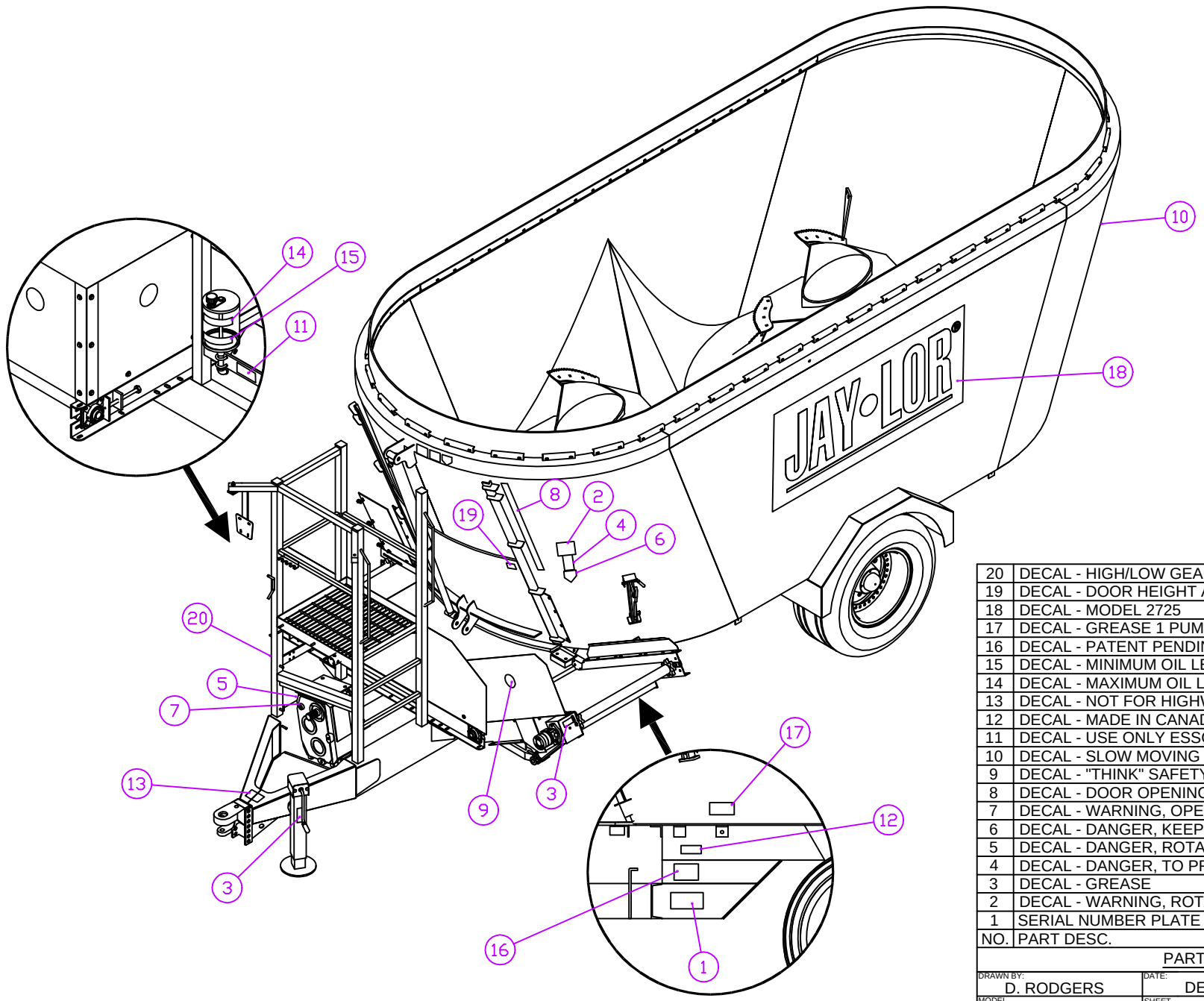

NO.	PART DESC.	QTY	PART NO.
20	DECAL - HIGH/LOW GEAR DIRECTION	1	120-00-33
19	DECAL - DOOR HEIGHT ARROW	2	120-00-34
18	DECAL - MODEL 2725	2	120-00-48
17	DECAL - GREASE 1 PUMP EVERY 8...	2	120-00-32
16	DECAL - PATENT PENDING	1	120-00-31
15	DECAL - MINIMUM OIL LEVEL	2	120-00-29
14	DECAL - MAXIMUM OIL LEVEL	2	120-00-28
13	DECAL - NOT FOR HIGHWAY TRAVEL...	1	120-00-24
12	DECAL - MADE IN CANADA	1	120-00-22
11	DECAL - USE ONLY ESSO OR MOBIL...	1	120-00-21
10	DECAL - SLOW MOVING VEHICLE	1	120-00-15
9	DECAL - "THINK" SAFETY	3	120-00-14
8	DECAL - DOOR OPENING MEASURE	2	120-00-13
7	DECAL - WARNING, OPERATE AT 1000...	1	120-00-20
6	DECAL - DANGER, KEEP CHILDREN...	3	120-00-11
5	DECAL - DANGER, ROTATING...	1	120-00-09
4	DECAL - DANGER, TO PREVENT...	3	120-00-08
3	DECAL - GREASE	3	120-00-07
2	DECAL - WARNING, ROTATING KNIVES	3	120-00-06
1	SERIAL NUMBER PLATE	1	120-00-05

PARTS LIST

DRAWN BY: D. RODGERS

DATE: DEC 18/00

MODEL: 2725

SHEET: 1 of 1

PART/ASSEMBLY NO: 129-05-06

JAY•LOR Fabricating Inc

TITLE: COMPLETE DECAL PACKAGE FOR MODEL 2725 W/ FRONT DOOR DISCHARGE AND 2-SPEED DRIVELINE

JAY•LOR®

Cutter • Mixer • Feeder

SERVICE DEPARTMENT FORMS

"Putting the 'Total' into TMR"

JAY-LOR® Fabricating Inc.
RR # 2 Orton, Ontario, Canada, L0N 1N0 Tel: (519) 787-9353 Fax: (519) 787-7053

Parts Order #: _____

Date: _____

JAY•LOR®
Fabricating Inc

Dealer:	**Customer:**
IRS#:	**IRS#:**
For Mixer Model #:	**Mixer Serial #:**

Quantity	Part/Assembly Number	Description

Carrier Preferred: _____ **Carrier Account #:** _____ ☐ Prepaid

Level of Service Required: ☐ Next Day ☐ 2nd Day ☐ 3rd Day ☐ Ground

Notes: _____

_____

_____

Reference: _____ **Signed:** _____

SHIP TO: ☐ **Dealer** ☐ **Customer**

JAY-LOR® Fabricating Inc.
RR # 2 Orton, Ontario, Canada, L0N 1N0 Tel: (519) 787-9353 Fax: (519) 787-7053

WARRANTY REQUEST FORM
WRF#:_____

JAY•LOR® Fabricating Inc

Date: _____

Dealer/Customer Name: _____ Tel: _____

Address: _____ Fax: _____

City/State/Zip: _____ IRS #: _____

Machine Model #: _____

Machine Serial #: _____

QTY	Defective Part	Part # (if applicable)	Problem

Shipping Details:

Preferred Carrier: _____ Carrier Acc't #: _____

Level of service Req'd: [ ] Next day [ ]2nd day [ ] 3rd day [ ] Ground Service

Ordered by: _____

IRS #: _____

Ship To Address:

Address: _____

City/State/Tel: _____

_____

Notes: _____

_____

_____

_____

Signature:_____ Printed Name:_____

JAY-LOR® Fabricating Inc.
RR # 2 Orton, Ontario L0N 1N0 Tel:(519) 787-9353 Fax:(519) 787-7053